SUBMITTAL PACKAGE

CSDG - 4388-4389

Prepared for:

Central States Diesel Generators

Cummins Project Manager:

Blake Sarmiento blake.sarmiento@cummins.com 502-991-1019

PLEASE COMPLETE THIS SECTION OR PROVIDE SIGNOFF TO PROCEED

☐ **Revise with corrections provided** **Date:**

☐ **Approved and released for production**

By (name and company):

Requested delivery date:

Requested delivery address:

Contact person and phone # for deliveries:

1/24/2024

Salesforce O# 462662

BMS # 437730

Customer PO# 4388-4389

Serving Cummins Customers

Cummins power solutions are supported by the largest and best-trained worldwide-certified sales/distributor network in the industry. This network will help you select and install the critical power solution to meet the requirements of your specific application. This same network provides experts with advanced technology to make your life easier while providing a seamless support experience.

IMPORTANT: *The critical power solution information and specifications included in this pdf can be used by the site contractor(s) and/or engineer(s) to assist with planning for and accomplishing the overall power solution installation. Please forward this document to the appropriate personnel, as necessary.*

It is the obligation of the electrical contractor and reviewing engineer to determine that the item quantities and accuracy of this submittal is correct as required for the job. Any inaccuracies or deviations must be addressed with Cummins Inc. before release to manufacturing. Any releases of material to manufacturing by the above parties constitute an acceptance of the accuracy of the submittal. Any changes after release will be viewed as a change order, subject to pricing changes. Please take the time to review this package for accuracy to prevent any after-shipment problems that could cause delay in energization.

Cummins certifies that these drawings, material lists, specification and datasheets have been checked prior to submittal and they:

- *accurately depict the proposed equipment*
- *provide current information to the date of the submittal and*
- *present true and accurate equipment information.*

This Approval Drawing Package is submitted as our interpretation of the project requirements and/or the specifications for this job. Please note that issuance of these submittals shall not be deemed or interpreted as performance nor acceptance of your purchase order terms and conditions.

For questions or comments regarding this submittal, please contact the Cummins Project Manager listed on the title page.

Section I

IMPORTANT!

FUEL SUPPLY REQUIREMENTS

Fuel Source: Natural Gas

Fuel Consumption at Full Load: 6994.0 SCFH

Required Operating Fuel Pressure: 10.0 - 20.0 in H_2O

Fuel pressure required at the engine mounted regulator while the generator set is in operation, no load to full load. ***Please Note: The pressure listed is not a static pressure. If the above pressure is not maintained while the generator set is operating up to full load, the system will not function as required and the fuel delivery system will need to be reworked to provide operating pressure as listed.***

Required Fuel Pressure **AND** Volume **MUST** be available under **ALL** operating conditions at the generator set location.

All generator sets must be installed with a flexible fuel line and fuel strainer prior to the engine connection:

Flexible Fuel Line: [✓] included loose accessory
[ ] included engine mounted

Fuel Strainer: [✓] included loose accessory

Sales and Service

Bill of Material

Feature Code	Description	Qty
C500N6B	**GENSET, SPARK-IGNITED - 60 HZ, 500 KW-625 KVA** C500N6B Genset - Spark Ign, Natural Gas, 60Hz, 500kW ENG GTA28E, 770 HP, 8.5:1, Factory Certified for Emissions CAT Catalyst, 5" Flange, NSPS 2/4/1 A331-2 Duty Rating - Standby Power L090-2 Listing - UL 2200 C002-2 Natural Gas F267-2 Enclosure - Sound Att, LEVEL 2, Galvaneal, Base Mtd, with Exhaust System P187-2 Onan Green Enclosure Color B267-2 Generator - HCI504D (ADS #306), 60Hz, Winding 311 - 12 Wire, 120C, 0.8pf R002-2 Voltage - 277/480, 3ph B184-2 Exciter / Regulator - PMG, 3 Phase Sensor KX21-2 Set Control - Power Command 3.3 MLD H609-2 Controls Facing Left E082-2 Radiator Cooled H389-2 Shutdown - Low Coolant Level H557-2 Coolant Heater_40°F MinAmbientTemp E098-2 Sightglass on Radiator A366-2 Engine Governor - Electronic, Isochronous Only A334-2 Engine Starter - 24 VDC Motor A333-2 Battery Charging Alternator - Normal Output D041-2 Engine Air Cleaner - Normal Duty H706-2 Lube Oil, Engine Filled Prior to Shipment H669-2 Anti-Freeze - 50/50 Mix, System Filled Prior to Shipment A466-2 Critical Grade Silencer, Carbon Steel H268-2 Extension - Oil Drain E089-2 Extension - Engine Coolant Drain H606-2 Bargraph - AC Analog Meters 0300-5929-02 Annunciator (RS485) L050-2 Manuals in English C8DXH Batteries - C8DXH Wet (QTY 2) F065-2 Battery Rack A465-2 Battery Charger, 120/240 VAC Input, 12A / 24V Output A059G917 Fuel Strainer - Gaseous, 3in NPT MM-3-24 Flexible Fuel Connection - Gaseous, 3in NPT KP74-2 Switch - Emergency Stop, External L026-2 Certified Test Report M107-2 Circuit Breaker - Li_800A_100%_RIGHT, 600/525V L280-2 Genset Warranty - Standby Power 2 year / 1000 hours F997-02 Std CB Mounting Option	2

Section II

Specification sheet

QTY. 2

Gaseous fuel generator set

400 kW - 500 kW 60 Hz

Description

You can count on the 400-500 kW natural gas generator set (GenSet) for the reliability, quality, and dependability that is genuine Cummins performance. EPA-certified, this fully-integrated power generation system provides optimum performance and versatility for stationary standby power applications.

Features

- Over 100 years of Cummins power generation technology and innovation
- Listed to UL 2200 and CSA standards for all low voltage models
- Stamford rugged and reliable alternator with state-of-the-art technology
- Two-year base warranty supported by a worldwide Cummins twenty-four hour, seven days-a-week, distributor network
- Accepts 100% rated load in a single step
- Capable of meeting NFPA 110 Type 10 for Level 1 emergency or standby power supply systems (EPSSs) when installed and operated per Cummins and NFPA guidelines
- Standard Power Command Control (PCC) 3300 technology provides digital (precise) frequency and voltage regulation
- Efficient and convenient operation monitoring and control options:
  - Modbus over the Internet (monitor and control)
  - Remote HMI (monitor and control)

Model	Power rating60 Hz kW (kVa) Standby	Emissions	Data sheet
C400N6	400 (500)	EPA-certified for stationary emergency and non-emergency applications	NAD-C400N6
C450N6	450 (562)		NAD-C450N6
C500N6B	500 (625)		NAD-C500N6B

Engine specifications

Base engine	Cummins GTA28E
Displacement	1709 in^3 (28 L)
Minimum battery capacity	1800 amps at minimum ambient temperature of 0 °F (-18 °C)
Battery charging alternator	70 amps
Starting voltage	24-volt, negative ground
Standard cooling system	104 °F (40 °C)

Alternator specifications

Design	Brushless, 4-pole, drip-proof revolving field
Stator	2/3 pitch
Rotor	Direct-coupled by flexible disc
Insulation system	Class H per NEMA MG1-1.65 or better
Standard temperature rise*	125 °C
Exciter type	Permanent Magnet Generator (PMG)
Phase rotation	A (U), B (V), C (W)
Alternator cooling	Direct-drive centrifugal blower

* For UL ratings, refer to temperature rise at 120 °C or below, and ambient temperature up to 40 °C

Outline drawing

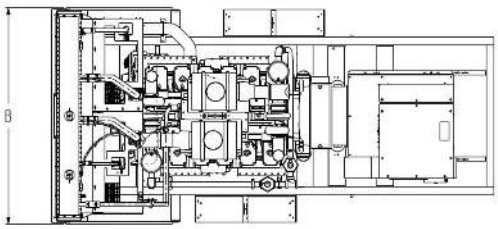

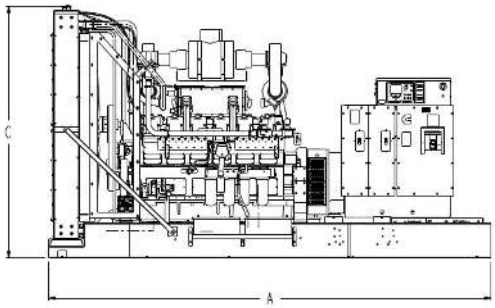

This outline drawing is for reference only.
Do not use for installation design.

Refer to drawings for specific weights & dimensions

All models	Dim "A" in. (cm)	Dim "B" in. (cm)	Dim "C" in. (cm)
Open set	166 (422)	82 (208)	98 (249)
Weather-protective enclosure	219 (556)	90 (229)	126 (320)
Sound-attenuated Level I & II enclosure	305 (775)	90 (229)	126 (320)

NOTE: Consult drawings for applicable weights. Contact the factory for additional information.

GenSet options and accessories

Engine

- 240/480 V, 4000 W coolant heaters (480 field-wired)
- 120/208/240 V, 300 W lube oil heater

Alternator

- 80 °C rise
- 105 °C rise
- 125 °C rise
- 120/240 V, 200 W anti-condensation heater

Fuel system - flexible fuel connector and fuel strainer

Exhaust system

- GenSet mounted muffler (enclosure models, only)
- Critical grade silencer

Generator set

- Batteries
- Battery charger - 120/208/240 V, 10A
- Main line circuit breaker
- Electronically-operated (E.O.) generator breaker
- PowerCommand Network I/O module
- PowerCommand Network Aux 101, 102 module
- Remote control HMI with extension harness
- Remote annunciator panel
- Spring isolators
- Audible alarm
- Oil maintainer
- Weather-protective enclosure with silencer
- Sound-attenuated enclosure Level I and Level II with silencer
- Warranty - five-year standby including parts, labor, and travel

Applicable codes and standards

The Underwriters Laboratory (UL) 2200 Listing is a comprehensive safety standard encompassing the design, construction, and performance of stationary GenSets.

CSA Group tests products under a formal process to ensure that they meet the safety and/or performance requirements of applicable standards. This GenSet is certified to: CSA 22.2 No. 100 Motors and Generators; CSA 22.2 No. 0.4-044 Bonding of Electrical Equipment; CSA 22.2 No. 14 Industrial Control Equipment; and CSA 22.2 No. 0 General Requirements - Canadian Electrical Code, Part II.

Engine is certified to Stationary Emergency and Non-Emergency U.S. EPA New Source Performance Standards (NSPS), 40 CFR 60 subpart JJJJ.
U.S. applications must be applied per EPA regulations.

This product has been manufactured under the controls established by a Bureau Veritas Certification approved management system that conforms with ISO 9001:2015.

PowerCommand 3.3 control system

An integrated microprocessor-based GenSet control system providing voltage regulation, engine protection, AmpSentry alternator protection, operator interface and isochronous governing.

Advanced control methodology

- Designed for reliable operation in harsh environment.
- Provides battery monitoring and testing features and smart starting control system.
- Includes three-phase sensing, full wave rectified voltage regulation, with a PWM output for stable operation with all load types.
- Digitally governed with temperature dynamic governing and integrated digital electronic isochronous governing.
- **Prototype tested** - UL, CSA, and CE compliant.
- **Supports multiple languages**- English, Spanish, and French (standard); other languages, optional.
- **Protects the engine**- cranking lockout, overspeed shutdown, and battleshort; sensor failure indication; low fuel level warning or shutdown; low oil pressure warning and shutdown; high/low coolant temperature warning and shutdown; fail to start (overcrank) and fail to crank shutdown; and battery voltage monitoring, protection, and testing.
- **Enables paralleling control** - direct control of the paralleling breaker and displays breaker status; First Start Sensor System selects first GenSet to close to bus; Phase Lock Loop Synchronizer with voltage matching; sync check relay; isochronous kW and kVar load sharing; load govern control for utility paralleling; extended Paralleling (baseload/peak shave) Mode; and digital power transfer control, for use with a breaker pair to provide open transition, closed transition, ramping closed transition, peaking and base load functions.
- **Includes AmpSentry alternator protection** - over current and short circuit shutdown; over current warning; single and three-phase fault regulation; over and under voltage/frequency shutdown; overload warning with alarm contact; reverse power and reverse var shutdown; and field overload shutdown.
- Cummins InPower PC-based service tool connects to the PowerCommand 3.3 control system for detailed diagnostics, setup, data logging, and fault simulation.
- Comes standard with PCCNet and Modbus interface.
- Allows for up to twenty configurable data inputs and outputs.

State-of-the-art operator panel

- Includes LED lamps indicating GenSet running, remote start, not in auto, common shutdown, common warning, manual run mode, auto mode and stop.
- **Displays engine data** - DC voltage and engine speed; lube oil pressure and temperature; coolant temperature; and comprehensive full authority electronic (FAE) data.
- **Provides GenSet data** - start attempts, starts, running hours, kW hours; load profile (operating hours at percent load in 5% increments); fault history – up to 32 events; data logging and fault simulation (requires InPower); air cleaner restriction indication; exhaust temperature in each cylinder.
- **Includes alternator data** - Line-to-neutral and line-to-line AC volts; three-phase AC current; frequency; kW, kVar, and power factor kVa (three-phase and total); and winding temperature and/or bearing temperature (optional).

Refer to document S-1570 for more detailed information.

100 YEARS OF POWER GENERATION

Ratings definitions

Emergency Standby Power (ESP):
Applicable for supplying power to varying electrical load for the duration of power interruption of a reliable utility source. Emergency Standby Power (ESP) is in accordance with ISO 8528. Fuel Stop power is in accordance with ISO 3046, AS 2789, DIN 6271, and BS 5514.

Prime Power (PRP):
Applicable for supplying power to varying electrical load for unlimited hours. Prime Power (PRP) is in accordance with ISO 8528. Ten percent overload capability is available in accordance with ISO 3046, AS 2789, DIN 6271, and BS 5514.

Base Load (Continuous) Power (COP):
Applicable for supplying power continuously to a constant electrical load for unlimited hours. Continuous Power (COP) is in accordance with ISO 8528, ISO 3046, AS 2789, DIN 6271, and BS 5514.

Demand Response Power Rating - Spark Ignited Gas (DRP):
Applicable for supplying electrical power in parallel with commercially available power in variable and non-variable load applications. This fuel rating is intended for use in situations where power outages are contracted, such as in utility power curtailment. Engine operation is limited to a total of 500 hours per year. Engines may be operated in parallel to the public utility for up to 500 hours per year, with an average load factor no greater than 80% of rated Demand Response Power. Engines with Standby Power ratings available can be run in Emergency Standby applications up to the Standby Power rating for up to 50 hours per year. The customer should be aware, however, that the life of any engine will be reduced by constant high load operation.

Warning: Backfeed to a utility system can cause electrocution and/or property damage. Do not connect GenSets to any building electrical system except through an approved device or after the building main disconnect is open. Neutral connection must be bonded in accordance with National Electrical Code.

Specifications are subject to change without notice.

Power You Can Rely On

To order, contact centralregionordergs@cummins.com.
Visit cummins.com to view all your power solutions.

Cummins Inc.
Box 3005
Columbus, IN 47202-3005
U.S.A.

1-800-CUMMINS™ (1-800-286-6467)
cummins.com

Printed in U.S.A.
©2021 Cummins Inc.

Generator set data sheet

Model	**C500N6B**
Frequency	**60 Hz**
Fuel type	**Natural gas**
kW (kVa) rating	**500 (625) standby**
Emissions	**EPA-certified for stationary emergency and non-emergency applications**

Exhaust emission data sheet	EDS-3069
Sound performance data sheet	MSP-4061
Cooling performance data sheet	MCP-2109
Prototype test summary data sheet	PTS-692
Standard set-mounted radiator cooling outline	C500N6B-01

Fuel consumption Fuel consumption for cfh and m^3/hr is based on 905 Btu/ft^3.	**1/4 load**	**1/2 load**	**3/4 load**	**full load**
cfh	2452	3839	5413	6994
m^3/hr	70	109	153	198
MMBtu/hr	2.22	3.47	4.90	6.33

Fuel supply Fuel supply pressure is measured at the factory-supplied fuel shut-off (FSO) valve. Fuel inlet pressure must not exceed 25 in. WC under any operating condition.	
Minimum operating pressure, in. H_20 (kPa)	10 (2)
Maximum operating pressure, in. H_20 (kPa)	20 (5)

Engine	**Standby**	**Prime**	**Continuous**
Engine manufacturer	Cummins		
Engine model	GTA 28E		
Configuration	V12		
Aspiration	Turbocharged and coolant-air aftercooled		
Gross engine power output, bhp (kWm)	770 (574)		
BMEP at set rated load, psi (kPa)	198 (1365)		
Bore, in. (mm)	5.6 (141)		
Stroke, in. (mm)	6 (152)		
Rated speed, rpm	1800		

Engine (cont'd.)	Standby	Prime	Continuous
Piston speed, ft./min (m/s)	1800 (9.1)		
Compression ratio	8.5:1		
Lube oil capacity, qt. (L)	72 (68)		
Overspeed limit, rpm	2200		
Regenerative power, kW	75		

Air			
Combustion air, cfm (m^3/min)	1119 (31.7)		
Max air cleaner restriction (dirty filter), in. H_2O (kPa)	15 (3.7)		
Alternator cooling air, cfm (m^3/min)	2776 (78.61)		

Exhaust			
Exhaust flow at set rated load, cfm (m^3/min)	3506 (105.2)		
Exhaust temp, °F (°C)	1156 (624)		
Max allowable system back pressure, in. H_2O (kPa)	47.7 (11.9)		
Catalyst back pressure, in. H_2O (kPa)	20.4 (5.08)		

Cooling			
Ambient design, °F (°C)	104 (40)		
Fan load, HP (kWm)	55 (41.0)		
Coolant capacity (with radiator), gal (L)	65 (246)		
Cooling system air flow, acfm (m^3/min)	56,400 (1597)		
Heat rejected, jacket water circuit, Btu/min (MJ/min)	33,577 (35.42)		
Heat rejected, after-cooler circuit, Btu/min (MJ/min)	3506 (3.7)		
Total heat radiated to room, Btu/min (MJ/min)	37,083 (39.12)		
Max cooling air flow static restriction, in. H_2O (kPa)	0.5 (0.12)		

Weight

Weight represents a set with standard features. See outline drawing for weights of other configurations.

Unit wet weight lbs. (kgs)	Refer to drawings for specific weights & dimensions

Full-load amperage (FLA) at rated voltage

Three-phase FLA based on 0.8 power factor (PF).

120/240 (1 Ph)	120/208	127/220	139/240	220/380	240/416	254/440	277/480	347/600
N/A	1735	1640	1504	950	867	820	752	601

Derates

Engine power available up to 3000 ft. (914 m) and ambient temperatures up to 104 ˚F (40 ˚C). Above these conditions, derate at 4% per 1000 ft. (305 m) and 1% per 18 ˚F (10 ˚C) to a maximum of 10,000 ft.

Ratings definitions

Emergency standby power (ESP):
Applicable for supplying power to varying electrical load for the duration of power interruption of a reliable utility source. Emergency Standby Power (ESP) is in accordance with ISO 8528. Fuel Stop power is in accordance with ISO 3046, AS 2789, DIN 6271, and BS 5514.

Prime power (PRP):
Applicable for supplying power to varying electrical load for unlimited hours. Prime Power (PRP) is in accordance with ISO 8528. Ten percent overload capability is available in accordance with ISO 3046, AS 2789, DIN 6271, and BS 5514.

Base load (continuous) power (COP):
Applicable for supplying power continuously to a constant electrical load for unlimited hours. Continuous Power (COP) is in accordance with ISO 8528, ISO 3046, AS 2789, DIN 6271, and BS 5514.

Demand Response Power Rating - Spark Ignited Gas (DRP):
Applicable for supplying electrical power in parallel with commercially available power in variable and non-variable load applications. This fuel rating is intended for use in situations where power outages are contracted, such as in utility power curtailment. Engine operation is limited to a total of 500 hours per year. Engines may be operated in parallel to the public utility for up to 500 hours per year, with an average load factor no greater than 80% of rated Demand Response Power. Engines with Standby Power ratings available can be run in Emergency Standby applications up to the Standby Power rating for up to 50 hours per year. The customer should be aware, however, that the life of any engine will be reduced by constant high load operation.

ISO 9001:2015

This product has been manufactured under the controls established by an approved management system that conforms with ISO 9001:2015.

Warning: Backfeed to a utility system can cause electrocution and/or property damage. Do not connect GenSets to any building electrical system except through an approved device or after the building main disconnect is open. Neutral connection must be bonded in accordance with National Electrical Code.

Specifications are subject to change without notice.

Power You Can Rely On

To order, contact centralregionordergs@cummins.com.
Visit cummins.com to view all your power solutions.

Cummins Inc.
Box 3005
Columbus, IN 47202-3005
U.S.A.

1-800-CUMMINS™ (1-800-286-6467)
cummins.com

Printed in U.S.A.
©2022 Cummins Inc.

Specification Sheet

PowerCommand® 3.3 Generator Set Digital Integrated Control System

Bargraph Optional

Introduction

The PowerCommand® 3.3 control system is a microprocessor-based generator set monitoring, metering, and control system, which is comprised of PowerCommand® Control 3300 and the Human Machine Interface 320. PCC3300 supports multiple operation modes including:

- Standalone,
- Synchronization only,
- Isolated bus paralleling,
- Utility single generator set paralleling,
- Utility multiple generator set paralleling,
- Utility single generator set paralleling with power transfer control (automatic mains failure),
- Isolated bus paralleling with Masterless Load Demand

PowerCommand® Control 3300 is designed to meet the exacting demands of the harsh and diverse environments of today's typical power generation applications for Full Authority Electronic or Hydromechanical engine power generator sets.

Offering enhanced reliability and performance over more conventional generator set controls via the integration of all generator control functions into a single system, PCC3300 is your Power of One generator set control solution.

Benefits and Features

- 320 x 240 pixels graphical LED backlit LCD
- Multiple languages supported
- AmpSentry™ protection provides industry-leading generator overcurrent protection
- Digital Power Transfer Control (Automatic Mains Failure) provides load transfer operation in open transition, closed transition, or soft (ramping) transfer modes
- Extended Paralleling (Peak Shave/Base Load) regulates the genset real and reactive power output while paralleled to the utility. Power can be regulated at either the genset or utility bus monitoring point
- Digital frequency synchronization and voltage matching
- Isochronous Load Sharing
- Droop kW and kVAr control
- Real time clock for fault and event time stamping
- Exerciser clock and time of day start/stop initiate a test with or without load, or a Base Load or Peak Shave session
- Digital automatic voltage regulation is provided using three phase sensing and full wave FET type regulator, which is compatible with either shunt or PMG excited systems with a standard AUX103 AVR or an option for a more powerful high-current field drive capability AUX106 AVR
- Digital engine speed governing is provided on applicable platforms
- Generator set monitoring (including metering) and protection with PCC3300 measuring voltage, current, kW and kVAr offering a measurement accuracy of 1%
- Utility / AC Bus metering and protection with PCC3300 voltage, current, kW and kVAr offering a measurement accuracy of 1%
- 12 V (DC) and 24 V (DC) battery operation
- RS-485 Modbus® interface for interconnecting to customer equipment
- Warranty and service – Cummins Power Generation offers a comprehensive warranty and worldwide distributor service network
- Global regulatory certification and compliance: PCC3300 is suitable for use on gensets that are designed, manufactured, tested and certified to relevant UL, NFPA, ISO, IEC, Mil Std., UKCA, and CE standards

©2022 Cummins Inc. | S-1570 (04/22)

PowerCommand® Generator Set Digital Control System PCC 3300

Introduction

PCC3300 is an industry-leading digital generator set control suitable for usage on a wide range of diesel and lean burn natural gas generator sets in both standalone as well as paralleling applications.

PowerCommand® is compatible with either shunt or PMG excitation, and is suitable for usage with reconnectable or non-reconnectable generators. Configuration for any frequency, voltage and power connection from 120 V (AC) to 600 V (AC) line-to-line or 601 V (AC) to 45k V (AC) with an external PT is supported. The PCC3300 derives its own power from the generator set starting batteries and functions over a voltage range of 8 V (DC) to 30 V (DC).

Features

- PCC3300 supports configurable control features via software download using InPower PC-compatible software
- 12 V (DC) and 24 V (DC) battery operation
- Digital automatic voltage regulation is provided using three phase sensing and full wave FET type regulator, which is compatible with either shunt or PMG excited systems with a standard AUX103 AVR or an option for a more powerful high-current field drive capability AUX106 AVR
- Digital engine speed governing on applicable platform is provided, which is capable of providing isochronous frequency regulation
- Full authority J1939 CANBus® prime mover communications and control is provided for platforms with an Engine Control Module (ECM)
- AmpSentry" protection provides industry-leading alternator overcurrent protection:
  - Time-based generator protection applicable to both line-to-line and line-to-neutral, that can detect an unbalanced fault condition and swiftly react appropriately. Balanced faults can also be detected by AmpSentry and appropriate acted upon.
  - Reduces the risk of Arc Flash due to thermal overload or electrical faults by inverse time protection
- Generator set monitoring offers status information for all critical prime mover and generator functions
- AC and DC digital generator set metering is provided. AC measurements are configurable for single or three phase sensing with PCC3300 measuring voltage, current, kW and kVAr offering a measurement accuracy of 1%
- Battery monitoring system continually monitors the battery output and warns of the potential occurrence of a weak battery condition
- Relay drivers for prime mover starter, fuel shutoff (FSO), glow plug/spark ignition power and switched B+ applications are provided
- Integrated generator set protection is offered to protect the prime mover and generator
- Real time clock for fault and event time stamping
- Exerciser clock and time of day start/stop initiate a test with or without load, or a Base Load or Peak Shave session
- Digital Power Transfer Control (Automatic Mains Failure) provides load transfer operation in open transition, closed transition, or soft (ramping) transfer modes
- Extended Paralleling (Peak Shave/Base Load) regulates the genset real and reactive power output while paralleled to the utility. Power can be regulated at either the genset or utility bus monitoring point
- Digital frequency synchronization and voltage matching
- Isochronous Load Sharing
- Droop kW and kVAr Control
- The synchronization check function provides adjustments for phase angle window, voltage window, frequency window and time delay
- Utility / AC Bus metering and protection with PCC3300 voltage, current, kW and kVAr offering a measurement accuracy of 1%
- Advanced serviceability is offered via InPower™, a PC-based software service tool
- PCC3300 is designed for reliable operation in harsh environments with the unit itself being a fully encapsulated module
- RS-485 ModBus interface for interconnecting to customer equipment
- Native on PCC3300: Four discrete inputs, two dry contact relay outputs and two low-side driver outputs are provided and are all configurable.
  - Optional extra PCC3300 input and output capability available via AUX101
- Warranty and service – Cummins Power Generation offers a comprehensive warranty and worldwide distributor service network
- Global regulatory certification and compliance: PCC3300 is suitable for use on gensets that are designed, manufactured, tested and certified to relevant UL, NFPA, ISO, IEC, Mil Std., UKCA and CE standards

©2022 Cummins Inc. | S-1570 (04/22)

Base Control Functions

HMI capability

Options: Local and remote HMI320 options are available

Operator adjustments: The HMI320 includes provisions for many set up and adjustment functions.

Genset hardware data: Access to the control and software part number, genset rating in kVA and genset model number is provided from the HMI320 or InPower.

Data logs: Information concerning all of the following parameters is periodically logged and available for viewing; engine run time, controller on time, number of start attempts, total kilowatt hours, and load profile. (Control logs data indicating the operating hours at percent of rated kW load, in 5% increments. The data is presented on the operation panel based on total operating hours on the generator.)

Fault history: Provides a record of the most recent fault conditions with control date and time stamp. Up to 32 events are stored in the control non-volatile memory.

Alternator data

- Voltage (single or three phase line-to-line and line-to-neutral)
- Current (single or three phase)
- kW, kVAr, Power Factor, kVA (three phase and total)
- Frequency

For Lean Burn Natural Gas Engine applications:

- Alternator heater status
- Alternator winding temperature (per phase) as well as alternator drive end and non-drive end bearing

Utility/AC bus data

- Voltage (three phase line-to-line and line-to-neutral)
- Current (three phase and total)
- kW, kVAR, Power Factor, kVA (three phase and total)
- Frequency

AmpSentry: 3x current regulation for downstream tripping/motor inrush management. Thermal damage curve (3-phase short) or fixed timer (2 sec for 1-Phase Short or 5 sec for 2-Phase short).

Engine data

- Starting battery voltage
- Engine speed
- Engine temperature
- Engine oil pressure
- Engine oil temperature
- Intake manifold temperature
- Coolant temperature
- Comprehensive Full Authority Engine (FAE) data (where applicable)

Lean Burn Natural Gas (LBNG) application parameters include:

- Safety shutoff valve status
- Valve proving status
- Downstream gas pressure
- Gas inlet pressure
- Gas mass flow rate
- Control valve position
- Gas outlet pressure
- Manifold pressure and temperature
- Throttle position
- Compressor outlet pressure
- Turbo speed
- Compressor bypass position
- Cylinder configuration (e.g., drive end and non-drive end configurations)
- Coolant pressure 1 and 2 as well as coolant temperature 1 and 2 for both HT/LT respectively
- Exhaust port temperature (up to 18 cylinders)
- Pre-filter oil pressure
- Exhaust back pressure
- Parent ECM internal temperature and isolated battery voltage
- Speed bias
- Child ECM internal temperature and isolated battery voltage
- Knock level, spark advance, and knock count (for up to 18 cylinders)
- Auxiliary supply disconnector status
- Engine heater status
- Coolant circulating pump status
- Lube oil priming pump status
- Lube oil status
- Oil heater status
- Derate authorization status
- Start system status
- Ventilator fan status
- Ventilation louvre status
- Radiator fan status
- DC PSU status
- Start inhibit/enable status and setup

Service adjustments – The HMI320 includes provisions for adjustment and calibration of genset control functions. Adjustments are protected by a password. Functions include:

- Engine speed governor adjustments
- Voltage regulation adjustments
- Cycle cranking
- Configurable fault set up
- Configurable input and output set up
- Meter calibration
- Paralleling setup
- Display language and units of measurement

Prime Mover Control

SAE-J1939 CAN interface to full authority ECMs (where applicable). Provides data transfer between genset and engine controller for control, metering and diagnostics.

12 V (DC) or 24 V (DC) nominal battery voltage is supported by PCC3300 for normal operation.

Temperature dependant prime mover governing dynamics: This function is supported enabling the engine to be responsive when warm and more stable when operating at lower temperature via providing control and modification over electronic governing parameters as a function of engine temperature.

Isochronous governing is provided in order to control prime mover speed within ±0.25% of nominal rated speed for any steady state load from no load to full load. During operation frequency drift should not exceed ±0.5% of nominal frequency given a 33ºC (or 60ºF) chance in ambient temperature within an eight-hour period.

Droop electronic speed is governing capability is natively offered by PCC3300 to permit droop from 0% to 10% between no load to full load.

Remote start capability is built into the PCC3300 as the unit accepts a ground signal from remote devices to automatically command the starting of the generator set as well as the reaching of rated speed, voltage and frequency or otherwise run at idle speed until prime mover temperature is adequate. The presence of a remote start signal shall cause the PCC3300 to leave sleep mode and return to normal power mode. PCC3300 supports an option for delayed start or stop.

Remote Start Integrity: In compliance with NEC2017 Start Signal Integrity standard – NFPA70 Article 700.10(D)(3), the remote start circuit from ATS to PCC3300 is continuously monitored for signal disturbance due to broken, disconnected or shorted wires via a configurable input. Loss of signal integrity results in activation of a remote start signal.

Remote and local emergency stopping capability: PCC3300 accepts ground signal from a locally or remoted mounted emergency stop switch to cause the generator set to immediately shutdown. The generator set is prevented from either running or cranking with the emergency stop switch engaged. If PCC3300 is in sleep mode, then the activation of any emergency stop switch shall return PCC3300 is normal powered state along with the activation of the corresponding shutdown and run-prevention states.

Sleep mode: PowerCommand 3.3 supports a configurable low current draw state, which is design with consideration to the needs of prime applications or others application without a battery charger (in order to minimize battery current drain).

Automatic prime mover starting: Any generator set controlled by PCC3300 is capable of automatic starting achieved via either magnetic pickup or main alternator output frequency. PCC3300 additionally supports configurable glow plug control where applicable.

Prime mover cycle cranking: PCC3300 supports configurable starting cycles and rest periods. Built in starter protection are incorporated to prevent the operator from specifying a starting sequence that may be damaging.

Configurable time delay functionality: PCC3300 supports time delayed generator set starting and stopping (for cooldown). Permissible time delays are as follows (noting a default setting is 0 seconds):

1. Start delay: 0 seconds to 300 seconds prior to starting after receiving a remote start signal.
2. Stop delay: 0 seconds to 600 seconds prior to shut down after receiving a signal to stop in normal operation modes.

Lean Burn Natural Gas application specific parameters

PCC3300 supports prime mover inhibiting in order to permit application-specific processes (i.e. Auxiliaries) to be started first.

Generator Control

PCC3300 performs both Genset voltage sensing and Genset voltage regulation as follows:

- Voltage sensing is integrated into PCC3300 via three phase line-to-line sensing that is compatible with shunt or PMG excitation systems
- Automatic voltage regulation is accomplished by using a three phase fully rectified input and has a FET output for good motor starting capability.

Major features of generator control include:

Digital output voltage regulation - Capable of regulating output voltage to within +/-1.0% for any loads between no load and full load. Voltage drift will not exceed +/-1.5% for a 40 ºC (104 ºF) change in temperature in an eight-hour period. On engine starting or sudden load acceptance, voltage is controlled to a maximum of 5% overshoot over nominal level.

The automatic voltage regulator feature can be disabled to allow the use of an external voltage regulator.

Droop voltage regulation - Control can be adjusted to droop from 0-10% from no load to full load.

Torque-matched V/Hz overload control - The voltage roll-off set point and rate of decay (i.e. the slope of the V/Hz curve) is adjustable in the control.

Fault current regulation - PowerCommand® will regulate the output current on any phase to a maximum of three times rated current under fault conditions for both single phase and three phase faults. In conjunction with a permanent magnet generator, it will provide three times rated current on all phases for motor starting and short circuit coordination purpose.

Cylinder Cut-off System (CCS): PCC 3300 supports Cylinder Cut-off System which is used to operate the engines on half bank at no load and light load conditions. CCS has below benefits on engine

performance- improved emission standards, improved fuel efficiency, reduced hydrocarbons, reduced white smoke, reduced wet stacking and higher exhaust temperature at light loads to improve turbocharger operations and catalyst performance.

Step Timing Control (STC): PCC 3300 supports STC functionality which is used to advance the engine timing of a hydro-mechanical engine during start up and light load conditions. During ADVANCED injection timing, it:

- Improves cold weather idling characteristics
- Reduces cold weather white smoke
- Improves light load fuel economy
- Reduces injector carboning

Paralleling Functions

First Start Sensor™ system – PowerCommand® provides a unique control function that positively prevents multiple gensets from simultaneously closing to an isolated bus under black start conditions. The First Start Sensor system is a communication system between the gensets that allows the gensets to work together to determine which genset is a system should be the first to close to the bus. The system includes an independent backup function, so that if the primary system is disabled the required functions are still performed.

Synchronizing – Control incorporates a digital synchronizing function to force the genset to match the frequency, phase and voltage of another source such as a utility grid. The synchronizer includes provisions to provide proper operation even with highly distorted bus voltage waveforms. The synchronizer can match other sources over a range of 60-110% of nominal voltage and -24 to +6 hertz. The synchronizer function is configurable for slip frequency synchronizing for applications requiring a known direction of power flow at instant of breaker closure or for applications where phase synchronization performance is otherwise inadequate.

Load sharing control – The genset control includes an integrated load sharing control system for both real (kW) and reactive (kVar) loads when the genset(s) are operating on an isolated bus. The control system determines kW load on the engine and kVar load on the alternator as a percent of genset capacity, and then regulates fuel and excitation systems to maintain system and genset at the same percent of load without impacting voltage or frequency regulation. The control can also be configured for operation in droop mode for kW or Kvar load sharing.

Load govern control– When PowerCommand® receives a signal indicating that the genset is paralleled with an infinite source such as a utility (mains) service, the genset will operate in load govern mode. In this mode the genset will synchronize and close to the bus, ramp to a pre-programmed kW and kVar load level, and then operate at that point. Control is adjustable for kW values from 0-100% of standby rating, and 0.7-1.0 power factor (lagging). Default setting is 80% of standby and 1.0 power factor. The control includes inputs to allow independent control of kW and kVar load level by a remote device while in the load govern mode. The rate of load increase and decrease is also adjustable in the control. In addition, the control can be configured for operation in kW or kVAR load govern droop.

Load demand control – The control system includes the ability to respond to an external signal to initiate load demand operation. On command, the genset will ramp to no load, open its paralleling breaker, cool down, and shut down. On removal of the command, the genset will immediately start, synchronize, connect, and ramp to its share of the total load on the system.

Sync check – The sync check function decides when permissive conditions have been met to allow breaker closure. Adjustable criteria are: phase difference from 0.1-20 deg, frequency difference from 0.001-1.0 Hz, voltage difference from 0.5-10%, and a dwell time from 0.5-5.0 sec. Internally the sync check is used to perform closed transition operations. An external sync check output is also available.

Genset and utility/AC bus source AC metering – The control provides comprehensive three phase AC metering functions for both monitored sources, including: 3-phase voltage (L-L and L-N) and current, frequency, phase rotation, individual phase and totalized values of kW, kVAR, kVA and Power Factor; totalized positive and negative kW-hours, kVAR-hours, and kVA-hours. Three wire or four wire voltage connection with direct sensing of voltages to 600V, and up to 45kV with external transformers. Current sensing is accomplished with either 5 amp or 1 CT secondaries and with up to 10,000 amp primary. Maximum power readings are 32,000kW/kVAR/kVA.

Power transfer control – provides integrated automatic power transfer functions including source availability sensing, genset start/stop and transfer pair monitoring and control. The transfer/retransfer is configurable for open transition, fast closed transition (less than 100msec interconnect time), or soft closed transition (load ramping) sequences of operation. Utility source failure will automatically start genset and transfer load, retransferring when utility source returns. Test will start gensets and transfer load if test with load is enabled. Sensors and timers include:

Under voltage sensor: 3-phase L-N or L-L under voltage sensing adjustable for pickup from 85-100% of nominal. Dropout adjustable from 75-98% of pickup. Dropout delay adjustable from 0.1-30 sec.

Over voltage sensor: 3-phase L-N or L-L over voltage sensing adjustable for pickup from 95-99% of dropout. Dropout adjustable from 105-135% of nominal. Dropout delay adjustable from 0.5-120 sec. Standard configuration is disabled and is configurable to enabled in the field using the HMI or InPower service tools.

Over/Under frequency sensor: Center frequency adjustable from 45-65 Hz. Dropout bandwidth adjustable from 0.3-5% of center frequency beyond pickup bandwidth. Pickup bandwidth adjustable from 0.3-20% of center frequency. Field configurable to enable.

Loss of phase sensor: Detects out of range voltage phase angle relationship. Field configurable to enable.

Phase rotation sensor: Checks for valid phase rotation of source. Field configurable to enable.

Breaker tripped: If the breaker tripped input is active, the associated source will be considered as unavailable.

Timers: Control provides adjustable start delay from 0 - 300sec, stop delay from 0 - 800sec, transfer delay from 0-120sec, retransfer delay from 0-1800sec, programmed transition delay from 0-60sec, and maximum parallel time from 0-1800sec.

Negative Sequence Current Protection: PCC3300 supports this protection natively in order to determine if the generator is at any point was running subject to negative phase sequencing.

Breaker control – Utility and Genset breaker interfaces include separate relays for opening and closing breaker, as well as inputs for both 'a' and 'b' breaker position contacts and tripped status. Breaker diagnostics include Contact Failure, Fail to Close, Fail to Open, Fail to Disconnect, and Tripped. Upon breaker failure, appropriate control action is taken to maintain system integrity.

Exerciser clock –The exerciser clock (when enabled) allows the system to be operated at preset times in either test without load, test with load, or extended parallel mode. A Real Time Clock is built in. Up to 12 different programs can be set for day of week, time of day, duration, repeat interval, and mode. For example, a test with load for 1 hour every Tuesday at 2AM can be programmed. Up to 6 different exceptions can also be set up to block a program from running during a specific date and time period.

Extended paralleling – In extended paralleling mode (when enabled) the controller will start the genset and parallel to a utility source and then govern the real and reactive power output of the genset based on the desired control point. The control point for the real power (kW) can be configured for either the genset metering point ("Base Load") or the utility metering point ("Peak Shave"). The control point for the reactive power (kVAR or Power Factor) can also be independently configured for either the genset metering point or the utility metering point. This flexibility would allow base kW load from the genset while maintaining the utility power factor at a reasonable value to avoid penalties due to low power factor. The System always operates within genset ratings. The control point can be changed while the system is in operation. Set points can be adjusted via hardwired analog input or adjusted through an operator panel display or service tool.

Application types – Controller is configured to operating in one of six possible application types. These topologies are often used in combinations in larger systems, with coordination of the controllers in the system either by external device or by interlocks provided in the control. Topologies that may be selected in the control include:

Standalone: Control provides monitoring, protection and control in a non-paralleling application.

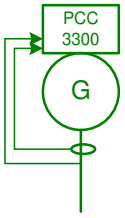

Synchronizer only: control will synchronize the genset to other source when commanded to either via a hardwired or Modbus driven input.

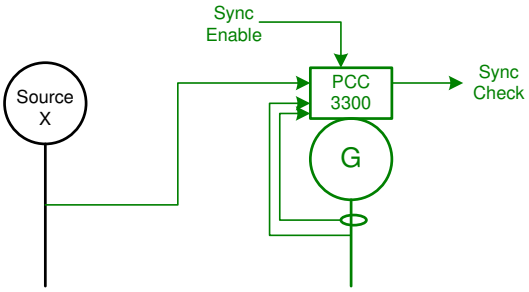

Isolated Bus: allows the genset to perform a dead bus closure or synchronize to the bus and isochronously share kW and kVAR loads with other gensets.

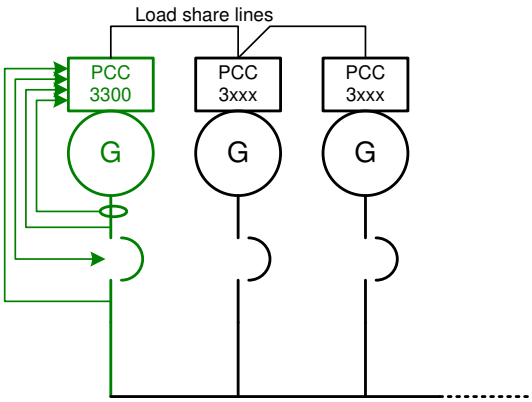

Utility Single: Control monitors one genset and utility. The control will automatically start and provide power to a load if the utility fails. The control will also resynchronize the genset back to the utility and provides extended paralleling capabilities.

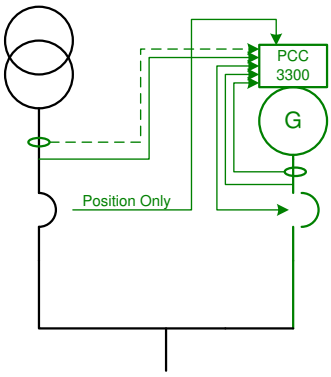

Utility Multiple: Supports all functionality of Isolated Bus and provides extended paralleling to the utility. Extended paralleling load set points follow a constant setting; dynamically follow an analog input, Modbus register or HMI.

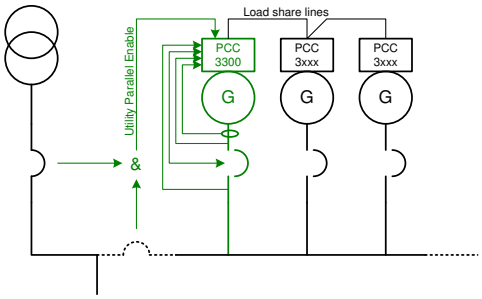

Power Transfer Control: Control operates a single genset/single utility transfer pair in open transition, fast closed transition, or soft closed transition. Extended paralleling functionality also provides base load and peak shave options.

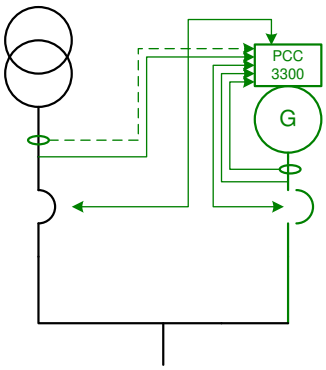

Masterless Load Demand (Optional Feature):

PowerCommand® 3.3 with Masterless Load Demand (MLD) technology enables generator sets to start/stop automatically based on load demand. Masterless Load Demand-capable generators are equipped with an additional s-CAN network connection that allows sharing of information amongst paralleled generator sets. MLD has been designed for hassle-free installation, commissioning and operation. MLD functionality. Integrated on-board system logic provides the MLD topology control without the need for any additional system.

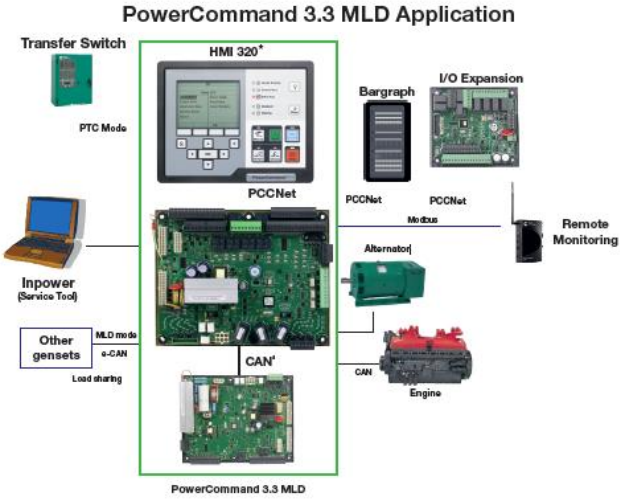

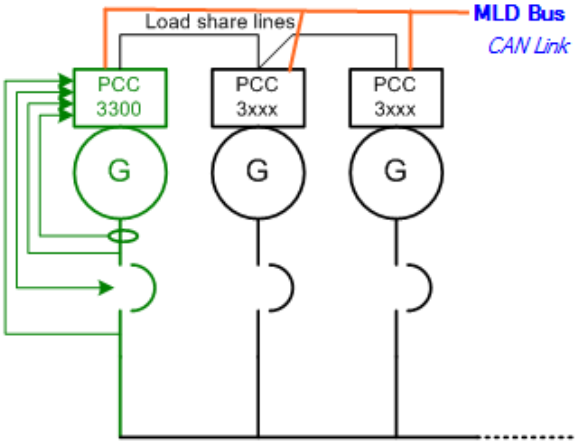

PCC3300 External Voltage and Frequency Biasing Inputs

PCC3300 supports externally driven voltage and frequency biasing capability in order to permit external paralleling (if intending to use this feature please contact your local distributor for further information).

Protective Functions

On operation of a protective function the control will indicate a fault by illuminating the appropriate status LED on the HMI, as well as display the fault code and fault description on the LCD. The nature of the fault and time of occurrence are logged in the control. The service manual and InPower service tool provide service keys and procedures based on the service codes provided. Protective functions include:

Battle short mode

When enabled and the *battle short* switch is active, the control will allow some shutdown faults to be bypassed. If a bypassed shutdown fault occurs, the fault code and description will still be annunciated, but the genset will not shutdown. This will be followed by a *fail to shutdown* fault. Emergency stop shutdowns and others that are critical for proper operation (or are handled by the engine ECM) are not bypassed. Please refer to the Control Application Guide or Manual for list of these faults.

Derate

The Derate function reduces output power of the genset in response to a fault condition. If a Derate command occurs while operating on an isolated bus, the control will issue commands to reduce the load on the genset via contact closures or Modbus. If a Derate command occurs while in utility parallel mode, the control will actively reduce power by lowering the base load kW to the derated target kW.

Configurable alarm and status inputs

The control accepts up to four alarm or status inputs (configurable contact closed to ground or open) to indicate a configurable (customer-specified) condition.

The control is programmable for warning, derate, shutdown, shutdown with cooldown or status indication and for labeling the input.

Emergency stop

Annunciated whenever either emergency stop signal is received from external switch.

General prime mover protection

Low and high battery voltage warning - Indicates status of battery charging system (failure) by continuously monitoring battery voltage.

Weak battery warning - The control system will test the battery each time the genset is signaled to start and indicate a warning if the battery indicates impending failure.

Low coolant level warning – Can be set up to be a warning or shutdown.

Low coolant temperature warning – Indicates that engine temperature may not be high enough for a 10 second start or proper load acceptance.

Fail to start (overcrank) shutdown - The control system will indicate a fault if the genset fails to start by the completion of the engine crack sequence.

Fail to crank shutdown - Control has signaled starter to crank engine but engine does not rotate.

Cranking lockout - The control will not allow the starter to attempt to engage or to crank the engine when the engine is rotating.

Fault simulation –The control in conjunction with InPower software, will accept commands to allow a technician to verify the proper operation of the control and its interface by simulating failure modes or by forcing the control to operate outside of its normal operating ranges. InPower also provides a complete list of faults and settings for the protective functions provided by the controller.

For Lean Burn Natural Gas Engine applications:

Off load running (protection) – This feature protects the engine in the event the genset is being called to go off load for too long.

Hydro Mechanical fuel system engine protection:

Overspeed shutdown – Default setting is 115% of nominal

Low lube oil pressure warning/shutdown – Level is preset (configurable with InPower or HMI) to match the capabilities of the engine used. Control includes time delays to prevent nuisance alarms.

High lube oil temperature warning/shutdown – Level is preset (configurable with InPower or HMI) to match the capabilities of the engine used. Control includes time delays to prevent nuisance alarms.

High engine temperature warning/shutdown – Level is preset (configurable with InPower or HMI) to match the capabilities of the engine used. Control includes time delays to prevent nuisance alarms.

Low coolant temperature warning – Indicates that engine temperature may not be high enough for a 10 second start or proper load acceptance.

High intake manifold temperature shutdown – Level is preset (configurable with InPower or HMI) to match the capabilities of the engine used. Control includes time delays to prevent nuisance alarms.

Full authority electronic engine protection:

Engine fault detection is handled inside the engine ECM. Fault information is communicated via the SAE-J1939 data link for annunciation in the HMI.

Alternator Protection

AmpSentry protective relay - A comprehensive monitoring and control system integral to the PowerCommand® Control System that guards the electrical integrity of the alternator and power system by providing protection against a wide array of fault conditions in the genset or in the load. It also provides single and three phase fault current regulation (3x Current) so that downstream protective devices have the maximum current available to quickly clear fault conditions without subjecting the alternator to potentially catastrophic failure conditions. Thermal damage curve (3 phase short) or fixed timer (2sec for 1P short, 5sec for 2P short). See document R1053 for a full-size time over current curve. The control does not included protection required for interconnection to a utility (mains) service.

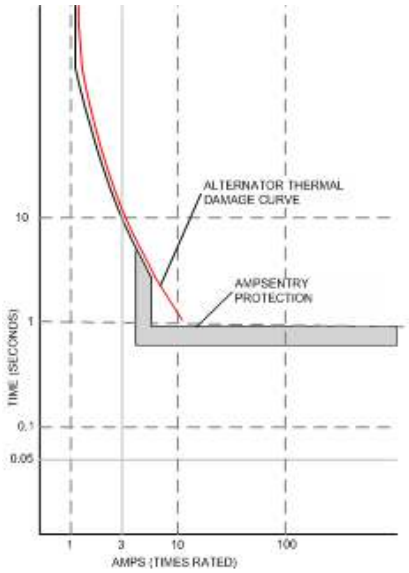

AmpSentry Maintenance Mode (AMM) - Instantaneous tripping, if AmpSentry Maintenance mode is active (50mS response to turn off AVR excitation/shutdown genset) for arc flash reduction when personnel are near genset.

High AC voltage shutdown (59) - Output voltage on any phase exceeds preset values. Time to trip is inversely proportional to amount above threshold. Values adjustable from 105-125% of nominal voltage, with time delay adjustable from 0.1-10 seconds. Default value is 110% for 10 seconds.

Low AC voltage shutdown (27) - Voltage on any phase has dropped below a preset value. Adjustable over a range of 50-95% of reference voltage, time delay 2-20 seconds. Default value is 85% for 10 seconds. Function tracks reference voltage. Control does not nuisance trip when voltage varies due to the control directing voltage to drop, such as during a V/Hz roll-off or synchronizing.

Under frequency shutdown (81 u) - Genset output frequency cannot be maintained. Settings are adjustable from 2-10 Hz below reference governor set point, for a 5-20 second time delay. Default: 6 Hz, 10 seconds. Under frequency protection is disabled when excitation is switched off, such as when engine is operating in idle speed mode.

Over frequency shutdown/warning (81o) - Genset is operating at a potentially damaging frequency level. Settings are adjustable from 2-10 Hz above nominal governor set point for a 1-20 second time delay. Default: 6 Hz, 20 seconds, disabled.

Overcurrent warning/shutdown (51) - Implementation of the thermal damage curve with instantaneous trip level calculated based on current transformer ratio and application power rating.

Loss of sensing voltage shutdown - Shutdown of genset will occur on loss of voltage sensing inputs to the control.

Field overload shutdown - Monitors field voltage to shutdown genset when a field overload condition occurs.

Over load (kW) warning - Provides a warning indication when engine is operating at a load level over a set point. Adjustment range: 80-140% of application rated kW, 0-120 second delay. Defaults: 105%, 60 seconds.

Reverse power shutdown (32) - Adjustment range: 5-20% of standby kW rating, delay 1-15 seconds. Default: 10%, 3 seconds.

Reverse Var shutdown (40) - Shutdown level is adjustable: 15-50% of rated Var output, delay 10-60 seconds. Default: 20%, 10 seconds.

Short circuit protection - Output current on any phase is more than 175% of rating and approaching the thermal damage point of the alternator. Control includes algorithms to protect alternator from repeated over current conditions over a short period of time.

Negative sequence overcurrent warning (46) – Control protects the generator from damage due to excessive imbalances in the three phase load currents and/or power factors.

Custom overcurrent warning/shutdown (51) – Control provides the ability to have a custom time overcurrent protection curve in addition to the AmpSentry protective relay function.

Ground fault overcurrent (51G) – Control detects a ground fault either by an external ground fault relay via a contact input or the control can measure the ground current from an external current transformer. Associated time delays and thresholds are adjustable via InPower or HMI.

Paralleling Protection

Breaker fail to close Warning: When the control signals a circuit breaker to close, it will monitor the breaker auxiliary contacts and verify that the breaker has closed. If the control does not sense a breaker closure within an adjustable time period after the close signal, the fail to close warning will be initiated.

Breaker fail to open warning: The control system monitors the operation of breakers that have been signaled to open. If the breaker does not open within and adjustable time delay, a Breaker Fail to Open warning is initiated.

Breaker position contact warning: The controller will monitor both 'a' and 'b' position contacts from the breaker. If the contacts disagree as to the breaker position, the breaker position contact warning will be initiated.

Breaker tripped warning: The control accepts inputs to monitor breaker trip / bell alarm contact and will initiate a breaker tripped warning if it should activate.

Fail to disconnect warning: In the controller is unable to open either breaker, a fail to disconnect warning is initiated. Typically, this would be mapped to a configurable output, allowing an external device to trip a breaker.

Fail to synchronize warning: Indicates that the genset could not be brought to synchronization with the bus. Configurable for adjustable time delay of 10 -900 seconds, 120 default.

Phase sequence sensing warning: Verifies that the genset phase sequence matches the bus prior to allowing the paralleling breaker to close.

Maximum parallel time warning (power transfer control mode only): During closed transition load transfers, control independently monitors paralleled time. If time is exceeded, warning is initiated and genset is disconnected.

Bus or genset PT input calibration warning: The control system monitors the sensed voltage from the bus and genset output voltage potential transformers. When the paralleling breaker is closed, it will indicate a warning condition if the read values are different.

Field Control Interface

Input signals to the PowerCommand® control include:

- Coolant level (where applicable)
- Fuel level (where applicable)
- Remote emergency stop
- Remote fault reset
- Remote start
- Rupture basin
- Start type signal
- Battle short
- Load demand stop
- Synchronize enable
- Genset circuit breaker inhibit
- Utility circuit breaker inhibit
- Single mode verify
- Transfer inhibit – prevent transfer to utility (in power transfer control mode)
- Retransfer inhibit – prevent retransfer to genset (in power transfer control mode)
- kW and kVAR load setpoints

Configurable inputs - Control includes (4) input signals from customer discrete devices that are configurable for warning, shutdown or status indication, as well as message displayed

Input signals for Lean Burn Natural Gas Engine applications:

- Gearbox oil pressure/temperature protection
- Fire fault
- Earth fault support as a discrete input via an appropriate secondary detection device
- Differential fault
- DC power supply fault
- Genset Interface Box (GIB) isolator open fault
- Start inhibit/enable (x3)
- Radiator fan trip
- Ventilator fan trip
- Ventilation louvers closed
- Start system trip
- Alternator heater trip
- Alternator heater status
- Alternator winding temperature (PT100 RTDx3)
- Alternator drive end bearing temperature (PT100 RTD)
- Alternator non-drive end bearing temperature (PT100 RTD)

Output signals from the PowerCommand® control include:

- Load dump signal: Operates when the genset is in an overload condition.
- Delayed off signal: Time delay-based output which will continue to remain active after the control has removed the run command. Adjustment range: 0 - 120 seconds. Default: 0 seconds.

- Configurable relay outputs: Control includes (4) relay output contacts (3 A, 30VDC). These outputs can be configured to activate on any control warning or shutdown fault as well as ready to load, not in auto, common alarm, common warning and common shutdown.
- Ready to load (genset running) signal: Operates when the genset has reached 90% of rated speed and voltage and latches until genset is switched to off or idle mode.
- Paralleling circuit breaker relays outputs: Control includes (4) relay output contacts (3.5A, 30 VDC) for opening and closing of the genset and utility breakers.

Output Signals for Lean Burn Natural Gas Engine applications:

- Start inhibit/enable event
- Emergency stop event
- Ventilator fan run control
- Louvre control
- Radiator fan control
- Alternator heater control
- Engine at idle speed event

Communications connections include:

- PC tool interface: This RS-485 communication port allows the control to communicate with a personal computer running InPower software.
- Modbus RS-485 port: Allows the control to communicate with external devices such as PLCs using Modbus protocol.

  Note - An RS-232 or USB to RS-485 converter is required for communication between PC and control.
- Networking: This RS-485 communication port allows connection from the control to the other Cummins Power Generation products.

Mechanical Drawing

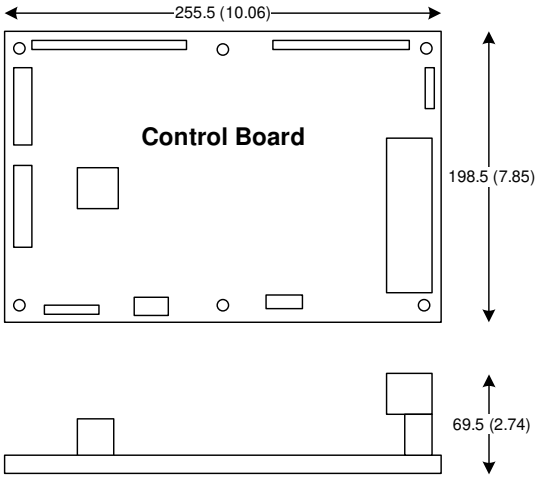

PowerCommand® Human Machine Interface HMI320

Description

This control system includes an intuitive operator interface panel that allows for complete genset control as well as system metering, fault annunciation, configuration and diagnostics. The interface includes five genset status LED lamps with both internationally accepted symbols and English text to comply with customer's needs. The interface also includes an LED backlit LCD display with tactile feel soft-switches for easy operation and screen navigation. It is configurable for units of measurement and has adjustable screen contrast and brightness.

The *run/off/auto* switch function is integrated into the interface panel.

All data on the control can be viewed by scrolling through screens with the navigation keys. The control displays the current active fault and a time-ordered history of the five previous faults.

Features:

- LED indicating lamps
  - genset running
  - remote start
  - not in auto
  - shutdown
  - warning
  - auto
  - manual and stop
  - Circuit breaker open (if equipped)
  - Circuit breaker closed (if equipped)
- 320 x 240 pixels graphic LED backlight LCD.
- Four tactile feel membrane switches for LCD defined operation. The functions of these switches are defined dynamically on the LCD.
- Seven tactile feel membrane switches dedicated screen navigation buttons for up, down, left, right, ok, home and cancel.
- Six tactile feel membrane switches dedicated to control for auto, stop, manual, manual start, fault reset and lamp test/panel lamps.
- Two tactile feel membrane switches dedicated to control of circuit breaker (where applicable).
- Allows for complete genset control setup.
- Certifications: Suitable for use on gensets that are designed, manufactured, tested and certified to relevant UL, NFPA, ISO, IEC, Mil Std., UKCA and CE standards.
- Languages supported: English, Spanish, French, German, Italian, Greek, Portuguese, Finnish, Norwegian, Danish, Russian (Cyrillic), Chinese, Hungarian, Japanese, Polish, Korean, Romanian, Brazilian Portuguese, Turkish, Dutch, and Czech

Communications connections include:

- PC tool interface - This RS-485 communication port allows the HMI to communicate with a personal computer running InPower.
- This RS-485 communication port allows the HMI to communicate with the main control board.

Mechanical Drawing

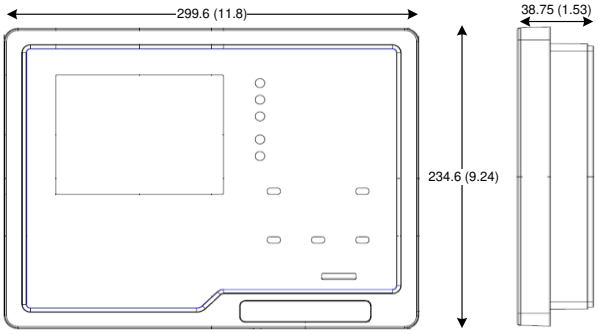

HMI

Dimensions: mm (inches)

Software

InPower (beyond 6.5 version) is a PC-based software service tool that is designed to directly communicate to PowerCommand® gensets and transfer switches, to facilitate service and monitoring of these products.

©2022 Cummins Inc. | S-1570 (04/22)

Environment

The control is designed for proper operation without recalibration in ambient temperatures from -40 ºC (-40 ºF) to +70º C (158 ºF), and for storage from -55 ºC (-67 ºF) to +80 ºC (176 ºF). Control will operate with humidity up to 95%, non-condensing.

The HMI is designed for proper operation in ambient temperatures from -20 ºC (-4 ºF) to +70 ºC (158 ºF), and for storage from -30 ºC (-22 ºF) to +80 ºC (176 ºF).

The control board is fully encapsulated to provide superior resistance to dust and moisture. Display panel has a single membrane surface, which is impervious to effects of dust, moisture, oil and exhaust fumes. This panel uses a sealed membrane to provide long reliable service life in harsh environments.

The control system is specifically designed and tested for resistance to RFI/EMI and to resist effects of vibration to provide a long reliable life when mounted on a genset. The control includes transient voltage surge suppression to provide compliance to referenced standards.

Certifications

PowerCommand® meets or exceeds the requirements of the following codes and standards:

- NFPA 110 for level 1 and 2 systems.
- ISO 8528-4:2005 compliance, controls and switchgear (second edition)
- CE marking: The CE marking is only valid when equipment is used in a fixed installation application. Material compliance declaration is available upon request.
- UKCA marking- The UKCA marking is only valid when equipment is used in a fixed installation application. Material compliance declaration is available upon request.
- EN 50081-1,2 residential/light industrial emissions or industrial emissions.
- EN 50082-1,2 residential/light industrial or industrial susceptibility.
- ISO 7637-2, level 2; DC supply surge voltage test.
- Mil Std 202C, Method 101 and ASTM B117: Salt fog test.
- UL 6200 recognized, suitable for use on UL 2200 Listed generator sets.
- CSA C282-M1999 compliance
- CSA 22.2 No. 14 M91 industrial controls.
- PowerCommand® control systems and generator sets are designed and manufactured in ISO 9001 certified facilities.
- ROHS (Restriction of Hazardous substance) complaint both for HMI 320 & PCC3300v2.

Reference Documents

Please refer to the following reference documents available in the PowerSuite library:

- PowerCommand™ 3.3. Application Guide
- T-037: PowerCommand Control Application Manual (ANSI Protective Functions)
- T-040: PowerCommand 3.3 Paralleling Application Guide

Please refer to the following reference documents available on Cummins Quickserve:

- Service Manuals for PC3.3 (non-MLD) and PC3.3 (MLD)
- Modbus Register Mapping

Warranty

All components and subsystems are covered by an express limited one-year warranty. Other optional and extended factory warranties and local distributor maintenance agreements are available.

PCCNet COMPATIBLE

Alternator Data Sheet
Frame Size: HC5D

Characteristics		1-bearing weight		2-bearing weight	
Weights:	Stator assembly:	1448 lb	657 kg	1448 lb	657 kg
	Rotor assembly:	1241 lb	563 kg	1179 lb	535 kg
	Complete assembly:	3071 lb	1393 kg	3075 lb	1395 kg
Maximum speed:		2250 rpm			
Excitation current:	Full load:	2.6 Amps			
	No load:	0.6 Amps			
Insulation system:	Class H throughout				

3 Ø Ratings (0.8 power factor)			60 Hz (winding no)					
			190/380 (311)	208/416 (311)	220/440 (311)	240/480 (311)	240 Delta (311)	347/600 (17)
150° C rise ratings	@40C	kW	428	470	500	540	470	540
		kVA	535	588	625	675	588	675
125° C rise ratings	@40C	kW	420	460	475	515	460	515
		kVA	525	575	594	644	575	644
105° C rise ratings	@40C	kW	376	415	430	470	415	470
		kVA	470	519	538	588	519	588
80° C rise ratings	@40C	kW	328	360	376	412	360	412
		kVA	410	450	470	515	450	515

3 Ø Reactances (per unit ± 10%)	190/380 (311)	208/416 (311)	220/440 (311)	240/480 (311)	240 Delta (311)	347/600 (17)
(Based on full load at 125° C rise rating)						
Synchronous	3.85	3.52	3.25	2.96	3.52	2.96
Transient	0.18	0.17	0.16	0.14	0.17	0.14
Subtransient	0.13	0.12	0.11	0.10	0.12	0.10
Negative sequence	0.25	0.22	0.20	0.19	0.22	0.19
Zero sequence	0.11	0.10	0.09	0.08	0.10	0.08

3 Ø Motor Starting (90% sustained voltage)	190/380 (311)	208/416 (311)	220/440 (311)	240/480 (311)	240 Delta (311)	347/600 (17)
Maximum kVA	1896	1896	1896	1896	1896	1896

Time Constants (sec)	190/380 (311)	208/416 (311)	220/440 (311)	240/480 (311)	240 Delta (311)	347/600 (17)
Transient	0.080	0.080	0.080	0.080	0.080	0.080
Subtransient	0.012	0.012	0.012	0.012	0.012	0.012
Open circuit	2.2	2.2	2.2	2.2	2.2	2.2
DC	0.018	0.018	0.018	0.018	0.018	0.018

Windings (@22° C)		190/380 (311)	208/416 (311)	220/440 (311)	240/480 (311)	240 Delta (311)	347/600 (17)
Stator resistance	(Ohms L-L)	0.0116	0.0116	0.0116	0.0116	0.0116	0.0158
Rotor resistance	(Ohms)	1.77	1.77	1.77	1.77	1.77	1.77
Number of leads		12	12	12	12	12	12

Sound data sheet

C500N6B 60 Hz spark-ignited generator set (GenSet)

A-weighted sound pressure levels (SPLs) @ 7 meters in dB(A)

The reference sound pressure is 20 µPa.

Configuration	Position*								8 position average SPL
	1	2	3	4	5	6	7	8	
Standard unhoused with infinite exhaust	84.0	88.8	86.5	89.7	91.0	90.7	89.2	88.6	89.0
Weather-protective enclosure with muffler	81.6	86.0	84.3	87.6	90.1	88.3	86.3	84.7	86.1
Sound-attenuated enclosure Level I with muffler	79.0	78.7	76.7	80.1	79.2	80.0	77.8	79.7	79.0
Sound-attenuated enclosure Level II with muffler	78.3	77.1	74.5	78.0	77.8	78.4	74.4	78.6	77.4

*Position 1 faces the GenSet front. The positions proceed around the GenSet in a counter-clockwise direction in 45° increments. All positions are approximately 7 m (23 ft.) from the surface of the GenSet and approximately 1.2 m (48 in) from floor level.

A-weighted sound power levels (SPWLs) @ 1 meter in dB(A)

The reference sound power is 1 pW (10^{-12} W).

Configuration	Octave band center frequency (Hz)								Total SPWL
	63	125	250	500	1000	2000	4000	8000	
Standard unhoused with infinite exhaust	82.2	97.0	107.4	112.0	112.5	110.6	106.6	104.9	117.9
Weather-protective enclosure with muffler	82.5	96.8	106.8	110.4	111.8	109.5	104.2	99.7	116.4
Sound-attenuated enclosure Level I with muffler	82.7	96.3	103.8	106.6	107.2	104.1	98.4	93.4	112.1
Sound-attenuated enclosure Level II with muffler	82.7	95.1	102.0	104.6	103.8	102.4	96.1	92.5	109.8

Data is based on a 100% rated load with a standard radiator cooling package.
Sound levels are subject to instrumentation, measurement, installation, and manufacturing variability.
The sound data for a GenSet with infinite exhaust does not include the exhaust noise contribution.
Sound power levels are calculated according to ISO 3744 and ISO 8528-10 requirements.

Cooling system data sheet

C500N6B 60 Hz spark-ignited generator set (GenSet)

40 °C ambient radiator cooling system

	Rating (kW)	Maximum allowable ambient temperature, °C							
		Unhoused maximum cooling @ air flow static restriction by in. H_20 (mm H_20)					Housed in free air (no air discharge restriction) by enclosure feature code		
		0.0 (0.0)	0.25 (6.4)	0.5 (12.7)	0.75 (19.1)	1.0 (25.4)	F265	F266	F267
Standby	500	N/A	N/A	42	N/A	N/A	40	40	40

Data reflects anticipated cooling performance for a typical GenSet.
Cooling data is based on 1000 ft. (305 m) site test location.
GenSet power output may need to be reduced at high ambient conditions. Consult GenSet data sheet for derate schedules.
Cooling performance may be reduced due to several factors including, but not limited to: incorrect installation; improper operation; fouling of the cooling system; and/or other site installation variables.

Exhaust emission data sheet

C500N6B 60 Hz spark-ignited generator set (GenSet)

Natural gas exhaust emissions data @ 1800 rpm

Exhaust component		25% load		50% load		75% load		Full load	
		g/hp-hr	ppm	g/hp-hr	ppm	g/hp-hr	ppm	g/hp-hr	ppm
Oxides of nitrogen (Dry)	NOx	0.02	3	0.03	6	0.04	8	0.10	25
Total unburned hydrocarbons (Wet)	THC	0.3	121	0.5	276	0.4	282	0.6	393
Carbon Monoxide (Dry)	CO	0.2	72	0.1	51	0.1	22	0.2	89
Non-methane hydrocarbons (Wet)	NMHC	0.01	1	0.01	6	0.01	5	0.02	10

Engine information:

Model: Cummins GTA28E

Emission certification: EPA-certified for stationary emergency and non-emergency applications

Aspiration: Turbocharged and coolant-air aftercooled

Bore: 5.6 in. (141 mm)

Stroke: 6 in. (152 mm)

Displacement: 1709 in^3 (28 L)

Cylinders: 12

Combustion: Stoichiometric

Compression ratio: 8.5:1

Test conditions

Steady-state emissions recorded per ISO 8178-1 during operation at rated engine speed (+/- 2%) and stated constant load (+/- 2%) with engine temperatures, pressures, and emission rates stabilized.

Fuel specifications:	Dry processed natural gas fuel with 905 BTU per standard cubic foot lower heating value.
Air inlet temperature:	77 °F (25 °C)
Barometric pressure:	29.39 in. Hg (99.5 kPa) at 500 ft. (152 m) altitude
Relative humidity:	30%
Emissions data tolerance:	NO_x: +/-10%, HC: +/-15%, CO: +/-10%, carbon dioxide (CO_2): +/-10%, oxygen (O_2): +/-10%

NOx, HC, CO and particulate matter (PM) emissions data above were collected using a production-intent engine under the test conditions shown. These results should be are representative but measured emissions in the field may be higher or lower than the values above due to test site ambient conditions, installation, fuel quality, test procedures, and instrumentation. Engine operation with air intake or exhaust restriction greater than published limits or with improper maintenance may increase emissions.

Prototype test report
60 Hz test summary

Applicable generator set models:
C500N6B (500 kW)

Representative prototype:
Model: C500N6B
Engine: GTA 28E
Alternator: HC5E

The following summarizes prototype testing conducted on the designated representative prototype of the specified models. This testing is conducted to verify the complete generator set (GenSet) electrical and mechanical design integrity.

Cooling system 40 °C ambient
0.5 in. H_2O restriction

The cooling system was tested to determine ambient temperature and static restriction capabilities. The test was performed at full rated load under static restriction conditions.

Alternator temperature rise
The highest rated temperature rise (120 °C) test results are reported as follows to verify that worst case temperature rises do not exceed allowable NEMA MG1 limits for Class H insulation. Tests were conducted per IEEE 115, rise by resistance and embedded detector, with rated voltages. Only the highest temperatures are reported.

Durability
The GenSet was subject to an endurance test operating at variable load up to the standby rating to verify structural soundness and durability of the design.

Steady state performance
The GenSet was tested to verify steady state operating performance. It was within these specified maximum limits:

Voltage regulation:	±0.50%
Random voltage variation:	±0.50%
Frequency regulation:	Isochronous
Random frequency variation:	±0.50%

Transient performance
The GenSet was tested with the listed alternator to verify single step loading capability as required by NFPA 110. Voltage and frequency response on load addition or rejection were evaluated. The following results were recorded at 0.8 power factor:

Voltage dip:	23.8%
Recovery time:	3 seconds
Frequency dip:	19.3%
Recovery time:	2.8 seconds

Voltage rise:	17.9%
Recovery time:	0.8 seconds
Frequency rise:	9.7%
Recovery time:	1.8 seconds

Harmonic analysis

	Line to line		Line to neutral	
Harmonic	No load	Ful load	No load	Full load
3	0	0	0	0
5	0.2	1	0.3	0.9
7	0.8	1.2	0.7	1.2
9	0	0.1	0	0
11	0.2	0.1	0.2	0.1
13	0.5	0.2	0.5	0.2
15	0	0.1	0	0

Section III

PowerPact® M-, P- and R-Frame, and Compact® NS630b–NS3200 Circuit Breakers

Catalog
0612CT0101R0709

Class 0612

Schneider Electric

Circuit Breaker Ratings

Interrupting Rating

The interrupting rating is the highest current at rated voltage the circuit breaker is designed to safely interrupt under standard test conditions. Circuit breakers must be selected with interrupting ratings equal to or greater than the available short-circuit current at the point where the circuit breaker is applied to the system (unless it is a branch device in a series rated combination). Interrupting ratings are shown on the front of the circuit breaker. For grounded B phase interrupting ratings, see Data Bulletin 2700DB0202.

Table 2: UL/IEC Circuit Breaker Interrupting Ratings

Circuit Breaker[1]	UL/CSA Rating (60 Hz)						IEC 60947-2 Rating (50/60 Hz)			
	3 Phase			Grounded B Phase (1Ø-3Ø)			240 Vac		380/415 Vac	
	240 Vac	480 Vac	600 Vac	240 Vac 2P	240 Vac 3P	480 Vac 3P	Icu	Ics	Icu	Ics
MG	65 kA	35 kA	18 kA	65 kA	—	—	50 kA	25 kA	35 kA	20 kA
MJ	100 kA	65 kA	25 kA	65 kA	—	—	65 kA	35 kA	50 kA	25 kA
PG	65 kA	35 kA	18 kA	65 kA	65 kA	35 kA	50 kA	25 kA	35 kA	20 kA
PJ	100 kA	65 kA	25 kA	65 kA	100 kA	14 kA	65 kA	35 kA	50 kA	25 kA
PK	65 kA	50 kA	50 kA	65 kA	65 kA	35 kA	50 kA	25 kA	50 kA	25 kA
PL	125 kA	100 kA	25 kA	65 kA	100 kA	14 kA	125 kA	65 kA	85 kA	45 kA
RG	65 kA	35 kA	18 kA	—	65 kA	35 kA	50 kA	25 kA	35 kA	20 kA
RJ	100 kA	65 kA	25 kA	100 kA	100 kA	35 kA	65 kA	35 kA	50 kA	25 kA
RK	65 kA	65 kA	65 kA	—	65 kA	35 kA	85 kA	65 kA	70 kA	55 kA
RL	125 kA	100 kA	50 kA	125 kA	125 kA	35 kA	125 kA	65 kA	85 kA	45 kA

1 The K interrupting rating is recommended for applications having high inrush and/or non-linear loads such as large motors, transformers, motors with soft starts, etc.

Table 3: IEC Only Circuit Breaker Interrupting Ratings (50/60 Hz)

Circuit Breaker	220/240 Vac		380/415 Vac		440 Vac		500/525 Vac		660/690 Vac	
	Icu	Ics	Icu	Ics	Icu	Ics	Icu	Ics	Icu	Ics
NS630b–NS1600 N Interrupting Rating	50 kA	75% Icu	50 kA	75% Icu	50 kA	75% Icu	40 kA	75% Icu	30 kA	75% Icu
NS630b–NS1600 H Interrupting Rating	70 kA	50% Icu	70 kA	50% Icu	65 kA	50% Icu	50 kA	50% Icu	42 kA	50% Icu
NS630b–NS1000 L Interrupting Rating	150 kA	100% Icu	150 kA	100% Icu	130 kA	100% Icu	100 kA	100% Icu	25 kA	100% Icu
NS1600b–NS3200 N Interrupting Rating	85 kA	75% Icu	70 kA	75% Icu	65 kA	100% Icu	65 kA	100% Icu	65 kA	100% Icu
NS1600b–NS3200 H Interrupting Rating	125 kA	75% Icu	85 kA	75% Icu	85 kA	75% Icu	—	—	—	—

© 2001–2009 Schneider Electric
All Rights Reserved

Catalog Numbering System

The M-frame, P-frame, R-frame and NS630b–NS3200 circuit breakers and cradles follow a “smart” catalog numbering system. The following tables are intended as a tool to decipher existing catalog numbers. **They are not intended for use in building catalog numbers, as some combinations may not be available.** To build a catalog number, please see the *Digest*, the *Product Selector* or contact the local field office.

M-Frame, P-Frame and R-Frame Circuit Breaker Catalog Numbers

NOTE: Not all options are available on all frames.

Table 10: Catalog Number for M-, P- and R-Frame (UL/IEC Dual-rated) Circuit Breakers

Field Position	Field Description	Options	Description
1	Brand Name	(blank)	Square D®
		N	Schneider Electric® (Formerly Merlin Gerin brand)
2	Circuit Breaker Frame	M	800 A Max.
		P	1200 A Max.
		R	3000 A Max.
3	Interrupting Rating	G	35 kA @ 480 Vac
		J	65 kA @ 480 Vac
		K	P-Frame: 50 kA @ 600 Vac R-Frame: 65 kA @ 600 Vac
		L	100 kA @ 480 Vac
4	Connection	F	No Lugs
		L	Lugs on Both Ends
		M	Lugs on I/ON End
		P	Lugs on O/OFF End
		A	I-Line
		D	Drawout (Not Available on M and R Frames)
5	Poles	2	2P
		3	3P
		4	4P
6	Voltage Rating	4	480 V
		6	600 V
7–9	Ampere Rating	###	Circuit Breaker Rating (120 = 1200 A)
		000	Automatic Switch Value
10	Standard or 100% Rated	(none)	Standard Rated
		C	100% rated

Continued on next page

© 2001–2009 Schneider Electric
All Rights Reserved

Table 10: Catalog Number for M-, P- and R-Frame (UL/IEC Dual-rated) Circuit Breakers

Field Position	Field Description	Options	Description
11–14	Circuit Breaker Trip System	(none)	ET1.0 (M-Frame)
		(none)	ET1.0I (P-Frame, R-Frame)
		U31	Micrologic® 3.0 Trip Unit
		U33	Micrologic 5.0 Trip Unit
		U41	Micrologic 3.0A Trip Unit
		U43	Micrologic 5.0A Trip Unit
		U44	Micrologic 6.0A Trip Unit
		U63	Micrologic 5.0P Trip Unit
		U64	Micrologic 6.0P Trip Unit
		U73	Micrologic 5.0H Trip Unit
		U74	Micrologic 6.0H Trip Unit
	Automatic Switch Trip System[1]	S60	600 A[2]
		S80	800 A[2]
		S10	1000 A[2]
		S12	1200 A
		S16	1600 A
		S20	2000 A
		S25	2500 A
	Motor Circuit Protector Trip System	M68	1200–9600 A[2]
		M69	1500–9600 A[2]
		M70	1800–9600 A[2]
15	Rating Plug	A–H	See Table 73
16-17	Modbus® Communication	E1	Modbus BCM
18	I-Line® Phasing	See *Digest*, *Product Selector*	
For Factory-Installed Accessories, See *Product Selector*			

[1] For more information on P-frame switches, see page 47. For more information on R-frame switches, see page 56.

[2] Not available on R-frame.

© 2001–2009 Schneider Electric
All Rights Reserved

exceeded, will trip the circuit breaker with no intentional delay. Instantaneous trip dial settings are 2–16 x I_n for 600 A circuit breakers and 1.5–12 x I_n for 800–1200 A circuit breakers.

Micrologic® Electronic Trip Systems

The P-frame, R-frame and NS630b–NS3200 electronic trip circuit breakers can be equipped with the optional Micrologic trip systems listed below:

Table 15: Micrologic Trip Systems

Model	(LS0) Long-time + Short-time + Zero delay (IEC Rated Only)	(LI) Long-time + Instantaneous Protection (UL Listed, IEC Rated)	(LSI) Long-time + Short-time + Instantaneous Protection (UL LIsted, IEC Rated)	(LSIG) Long-time + Short-time + Instantaneous Protection + Equipment Ground-fault Protection (UL LIsted, IEC Rated)
Micrologic Basic Trip Unit	2.0	3.0	5.0	—
Micrologic A Trip Unit	2.0A	3.0A	5.0A	6.0A
Micrologic P Trip Unit	—	—	5.0P	6.0P
Micrologic H Trip Unit	—	—	5.0H	6.0H

Trip units are designed to protect power circuits and loads. Micrologic trip systems use a set of current transformers (called CTs or sensors) to sense current, a trip unit to evaluate the current, and a tripping solenoid to trip the circuit breaker. Adjustable rotary switches on the trip unit allow the user to set the proper overcurrent or equipment ground-fault current protection required in the electrical system. If current exceeds a set value for longer than its set time delay, the trip system opens the circuit breaker. Alarms may be programmed for remote indications. Measurements of current, voltage, frequency, power, and power quality optimize continuity of service and energy management.

Integration of protection functions in the Application Specific Integrated Circuit (ASIC) electronic component used in all Micrologic trip units guarantees a high degree of reliability and immunity to conducted or radiated disturbances. On Micrologic P and H trip units, advanced functions are managed by an independent microprocessor.

Circuit breakers are shipped with the trip unit long-time pickup switch set at 1.0 and all other trip unit adjustments set at their lowest settings. Actual settings required for a specific application must be determined by a qualified consultant or plant engineer. A coordination study is recommended to provide coordination between all circuit breakers in the distribution system.

Table 16: Micrologic® Trip Unit Features

Feature	Micrologic Trip Unit (X = Standard Feature O = Available Option)										
	Standard			Ammeter				Power		Harmonics	
	2.0	3.0	5.0	2.0A	3.0A	5.0A	6.0A	5.0P	6.0P	5.0H	6.0H
Field-Installable	X	X	X	X	X	X	X	X	X	X	X
LI		X			X						
LS0	X			X							
LSI			X			X		X		X	
LSIG/Ground-Fault Trip[1]							X		X		X
Ground-Fault Alarm/No Trip[1, 2]								X		X	
Ground-Fault Alarm and Trip[1, 2]									X		X
Adjustable Rating Plugs	X	X	X	X	X	X	X	X	X	X	X
True RMS Sensing	X	X	X	X	X	X	X	X	X	X	X
UL Listed		X	X		X	X	X	X	X	X	X
Thermal Imaging	X	X	X	X	X	X	X	X	X	X	X
Phase-Loading Bar Graph				X	X	X	X	X	X	X	X
LED for Long-Time Pick-Up	X	X	X	X	X	X	X	X	X	X	X
LED for Trip Indication				X	X	X	X	X	X	X	X
Digital Ammeter				X	X	X	X	X	X	X	X

© 2001–2009 Schneider Electric
All Rights Reserved

Table 16: Micrologic® Trip Unit Features *(continued)*

Feature	Micrologic Trip Unit (X = Standard Feature O = Available Option)										
	Standard			Ammeter				Power		Harmonics	
	2.0	3.0	5.0	2.0A	3.0A	5.0A	6.0A	5.0P	6.0P	5.0H	6.0H
Zone-Selective Interlocking[3]				X		X	X	X	X	X	X
Communications				O	O	O	O	X	X	X	X
LCD Dot Matrix Display								X	X	X	X
Advanced User Interface								X	X	X	X
Protective Relay Functions								X	X	X	X
Neutral Protection[1]								X	X	X	X
Contact Wear Indication								X	X	X	X
Incremental Fine Tuning of Settings								X	X	X	X
Selectable Long-Time Delay Bands								X	X	X	X
Power Measurement								X	X	X	X
Power Quality Measurements										X	X
Waveform Capture										X	X

1 3Ø, 4W circuits require either a neutral current transformer or a 4-pole breaker..

2 Requires M6C Programmable Contact Module.

3 Not available for 2.0A trip unit as upstream devices.

Micrologic® 2.0, 3.0 and 5.0 Basic Trip Units

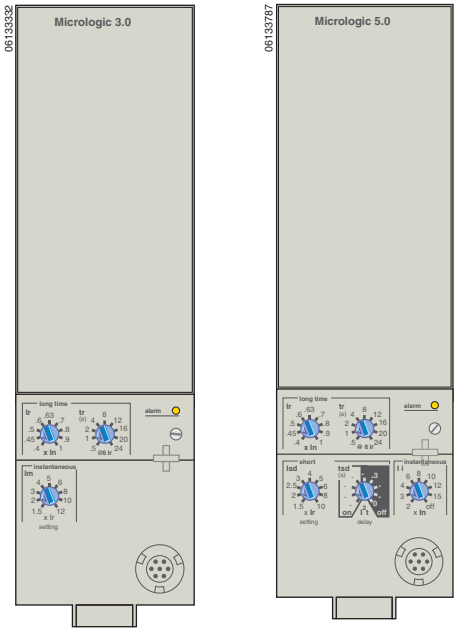

Micrologic 3.0 and 5.0 Basic Trip Units

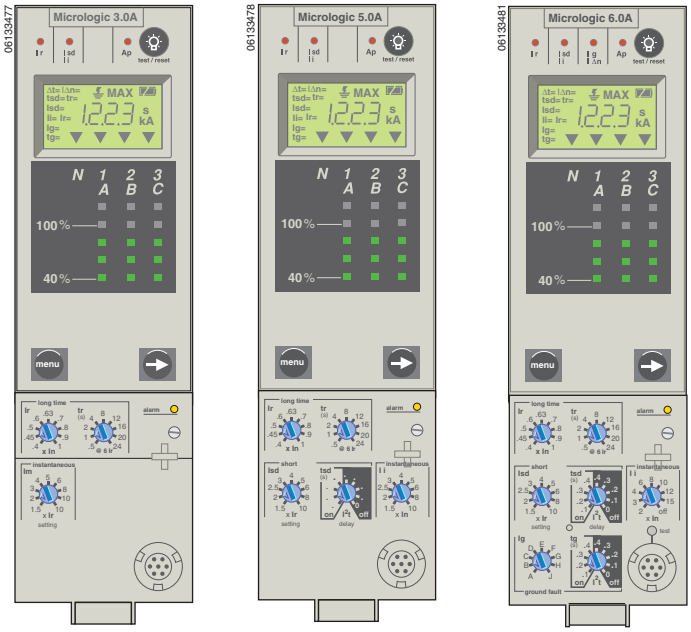

Micrologic 3.0A, 5.0A and 6.0A Trip Units

© 2001–2009 Schneider Electric
All Rights Reserved

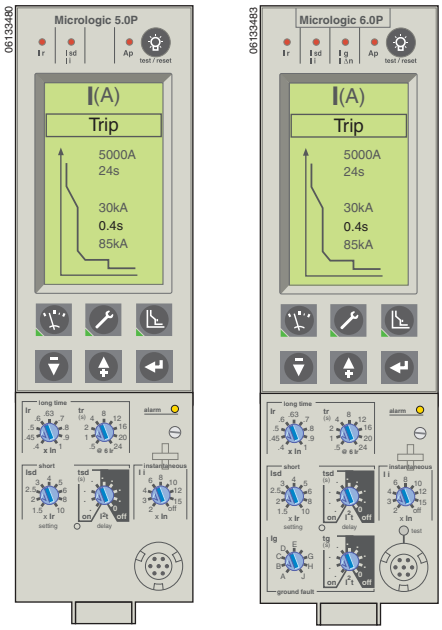

Micrologic 5.0P and 6.0P Trip Units

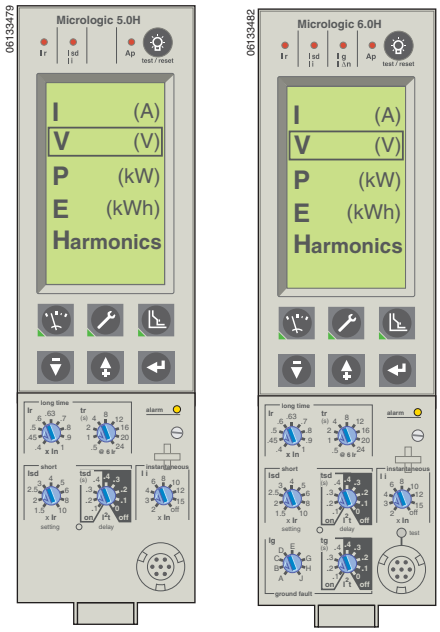

Micrologic 5.0H and 6.0H Trip Units

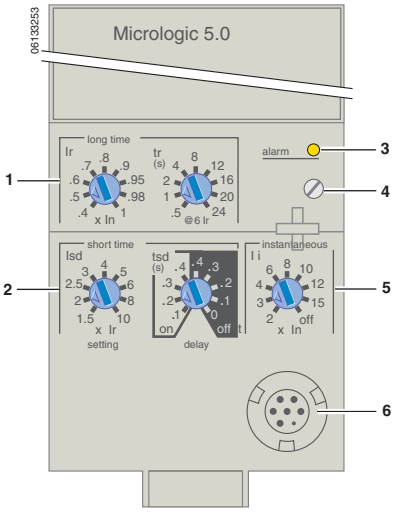

1—Long-time current setting and tripping delay
2—Short-time pickup and tripping delay
3—Overload signal (LED)
4—Long-time rating plug screw
5—Instantaneous pickup
6—Test connector

The Micrologic 2.0, 3.0, and 5.0 basic trip units protect power circuits.

Protection Settings

Protection thresholds and delays are set using the rotary switches. A full-range of long-time settings are available via field-installable adjustable rating plugs.

- Overload protection
  - — True RMS long-time protection
  - — Thermal imaging: Active thermal imaging before and after tripping
- Short-circuit protection
  - — Short-time RMS
  - — Selection of I^2t type (ON or OFF) for short-time delay
- Instantaneous protection
- Neutral protection on four-pole circuit breakers

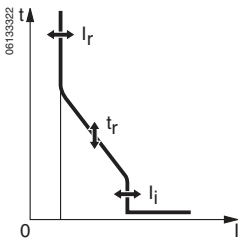

Table 17: Micrologic 2.0 and 3.0 Basic Trip Unit Settings

Long-time Protection	Current setting (A) Tripping between 1.05 and 1.20 x I_r	$I_r = I_n$ x ...	2.0:	0.40	0.50	0.60	0.70	0.80	0.90	0.95	0.98	1.00
			3.0:	0.40	0.45	0.50	0.60	0.63	0.70	0.80	0.90	1.00
			Other ranges are available by changing rating plug									
	Maximum Time Delay (s) Accuracy: 0 to –20%	t_r at 1.5 x I_r		12.5	25	50	100	200	300	400	500	600
		t_r at 6 x I_r		0.5	1	2	4	8	12	16	20	24
		t_r at 7.2 x I_r		0.34	0.69	1.38	2.7	5.5	8.3	11	13.8	16.6
	Thermal Imaging			20 minutes before or after tripping								
Short-time Protection	Current Setting (A) Accuracy: ±10% No delay	$I_{sd} = I_r$ x ...	2.0:	1.5	2	2.5	3	4	5	6	8	10

© 2001–2009 Schneider Electric
All Rights Reserved

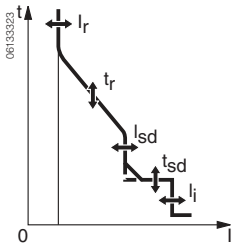

Table 17: Micrologic 2.0 and 3.0 Basic Trip Unit Settings

Instantaneous Protection	Current Setting (A) Accuracy: ±10%	$I_i = I_n$ x ...	3.0:	1.5	2	3	4	5	6	8	10	12

Table 18: Micrologic 5.0 Basic Trip Unit Settings

Long-time Protection	Current Setting (A) Tripping Between 1.05 and 1.20 x I_r	$I_r = I_n$ x ...	IEC:	0.40	0.50	0.60	0.70	0.80	0.90	0.95	0.98	1.00
			UL:	0.40	0.45	0.50	0.60	0.63	0.70	0.80	0.90	1.00
			Other Ranges are Available by Changing Rating Plug									
	Maximum Time Delay (s) Accuracy: 0 to –20%	t_r at 1.5 x I_r		12.5	25	50	100	200	300	400	500	600
		t_r at 6 x I_r		0.5	1	2	4	8	12	16	20	24
		t_r at 7.2 x I_r		0.34	0.69	1.38	2.7	5.5	8.3	11	13.8	16.6
	Thermal Imaging			20 Minutes Before or After Tripping								
Short-time Protection	Current Setting (A) Accuracy: ±10%	$I_{sd} = I_r$ x ...		1.5	2	2.5	3	4	5	6	8	10
	Maximum Time Delay (s) at 10 x I_r	Settings	I^2t OFF	0	0.1	0.2	0.3	0.4				
			I^2t ON		0.1	0.2	0.3	0.4				
		t_{sd}	Min. Trip Time (ms)	20	80	140	230	350				
			Max. Trip Time (ms)	80	140	200	320	500				
Instantaneous Protection	Current Setting (A) Accuracy: ±10%	$I_i = I_n$ x ...		2	3	4	6	8	10	12	15	off

© 2001–2009 Schneider Electric
All Rights Reserved

Micrologic® 5.0P and 6.0P Trip Units with Power Metering

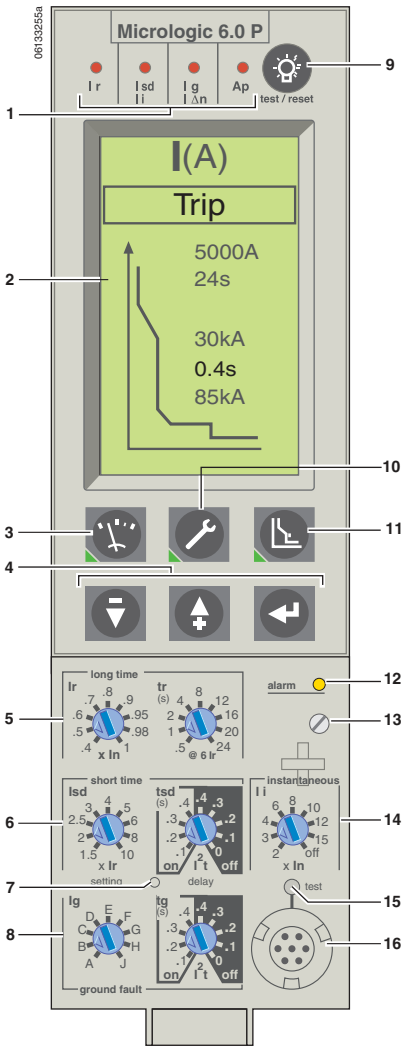

1—Indication of tripping cause
2—High resolution screen
3—Measurement display
4—Navigation buttons
5—Long-time current setting and tripping delay
6—Short-time pickup and tripping delay
7—Hole for settings lockout pin
8—Ground-fault pickup and tripping delay
9—Test lamp and indication reset
10—Maintenance indicators
11—Protection settings
12—Overload signal (LED)
13—Long-time rating plug screw
14—Instantaneous pickup
15—Electronic push-to-trip
16—Test connector

Micrologic P trip units provide power metering and extended protection in addition to the adjustable protection functions of the Micrologic A trip unit.

Protection Settings

The adjustable protection functions of the 5.0P and 6.0P trip units are identical to those of Micrologic A trip unit (overloads, short circuits, equipment ground-fault protection; see page 27). These units also feature:

- Fine adjustment

  Within the range below the rotary switch setting, fine adjustments of pickups/delays in steps of 1 A/s (except for short-time and ground-fault) are possible on the keypad or remotely by the communication network.

- Inverse definite minimum time lag (IDMTL) setting.

  Coordination with fuse-type or medium-voltage protection systems is optimized by adjusting the long-time delay curve around 6 x I_r axis. This setting ensures better coordination with certain loads.

- Neutral protection

  On three-pole circuit breakers, neutral protection may be set using the keypad or remotely using the communication network to one of four positions: OFF, 1/2N (1/2 x I_n), 1N (1 x I_n), or 1.6N (2 x I_n).

  NOTE: Neutral protection is disabled if long-time curve is set to one of the IDMTL protection settings.

- Configuring Alarms and Other Protection Functions

  When the cover is closed, the keypad may no longer be used to change the protection settings, but it still provides access to the displays for measurements, histories, indicators, etc. Depending on the thresholds and time delays set, the Micrologic P trip unit monitors current, voltage, power, frequency, and phase sequence. Each threshold overrun may be signalled remotely via the communication network.

Each threshold overrun may be combined with tripping (protection) or an indication carried out by an optional M6C programmable contact (alarm), or both (protection and alarm).

Maintenance Record

The maintenance record can be consulted using the full-function test kit or remotely via the communication network. It can be used as an aid in troubleshooting and to assist scheduling for device maintenance operations. Recorded indications include:

- Highest current measured
- Operation counter (cumulative total and total since last reset)
- Number of test kit connections
- Number of trips in operating mode

Load Shedding and Reconnection Parameters

Load shedding and reconnection parameters can be set according to the power or the current flowing through the circuit breaker. Load shedding is carried out by a remote computer via the communication network or by an M6C programmable contact.

© 2001–2009 Schneider Electric
All Rights Reserved

Indication Option Via Programmable Contacts

The M6C programmable contact may be used to signal threshold overruns or status changes. It can be programmed using the keypad on the Micrologic P trip unit or remotely using the communication network. The contact is required to obtain data from the protective relay functions on Type P and Type H trip units.

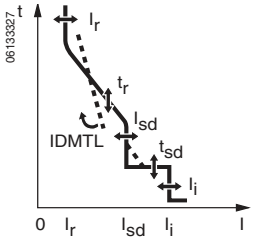

Table 23: Micrologic 5.0P and 6.0P Trip Unit Settings

Long-Time (RMS) Protection	Current Setting (A) Tripping Between 1.05 and 1.20 x I_r	$I_r = I_n$ x...	IEC	0.40	0.50	0.60	0.70	0.80	0.90	0.95	0.98	1.00
		$I_r = I_n$ x...	UL	0.40	0.45	0.50	0.60	0.63	0.70	0.80	0.90	1.00
		Other Ranges are Available by Changing Rating Plug										
	Maximum Time Delay (s) Accuracy: 0 to –20%	t_r at 1.5 x I_r		12.5	25	50	100	200	300	400	500	600
		t_r at 6 x I_r		0.5	1	2	4	8	12	16	20	24
		t_r at 7.2 x I_r		0.34	0.69	1.38	2.7	5.5	8.3	11	13.8	16.6
	IDMTL Setting	Curve slope		SIT		VIT		EIT		HV Fuse		DT
	Thermal Imaging			20 Minutes Before or After Tripping								
Short-Time (RMS) Protection	Current Setting (A) Accuracy: ±10%	$I_{sd} = I_r$ x...		1.5	2	2.5	3	4	5	6	8	10
	Maximum Time Delay (s) at 10 x I_r	Settings	I^2t OFF	0	0.1	0.2	0.3	0.4				
			I^2t ON		0.1	0.2	0.3	0.4				
		t_{sd}	Min. Trip Time (ms)	20	80	140	230	350				
			Max. Trip Time (ms)	80	140	200	320	500				
Instantaneous Protection	Current Setting (A) Accuracy: ±10%	$I_i = I_n$ x...		2	3	4	6	8	10	12	15	off

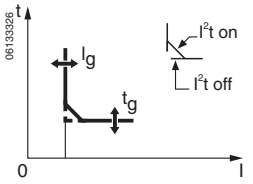

Table 24: Micrologic 6.0P Trip Unit Ground-Fault Settings

Ground-Fault Pickup (A) Accuracy: ±10%		$I_g = I_n$ x...	A	B	C	D	E	F	G	H	J
		$I_n \leq 400$ A	0.3	0.3	0.4	0.5	0.6	0.7	0.8	0.9	1.0
		400 A < $I_n \leq 1200$ A	0.2	0.3	0.4	0.5	0.6	0.7	0.8	0.9	1.0
		$I_n > 1200$ A	500	640	720	800	880	960	1040	1120	1200
Maximum Time Delay (s) at 10 x I_r	Settings	I^2t OFF	0	0.1	0.2	0.3	0.4				
		I^2t ON		0.1	0.2	0.3	0.4				
	t_g	Min. Trip Time (ms)	20	80	140	230	350				
		Max. Trip Time (ms)	80	140	200	320	500				

Table 25: Micrologic 5.0P and 6.0P Trip Unit Settings for Protection Functions

			Threshold	Time Delay
Current	Current Imbalance		0.05 to 0.6 x I_{max}	1 to 40 s
	Maximum Current	I_{max}: I_a,I_b,I_c,I_n,I_g	0.2 to 1.0 x I_n	15 to 1500 s
Voltage	Voltage Imbalance		0.02 to 0.3 x V_n	1 to 40 s
	Minimum Voltage	V_{min}	100 to 725 V (Phase Total)	0.25 to 0.5 s
	Maximum Voltage	V_{max}	100 to 1200 V (Between Phases)	0.20 to 5.0 s
Power	Maximum Power	P_{max}	5 to 500 kW	0.2 to 20 s
	Reverse Power	P_r	0.02 to 0.2 x P_n	0.5 to 20 s
Frequency	Minimum Frequency	F_{min}	45 to 65 Hz	0.2 to 5 s
	Maximum Frequency	F_{max}	45 to 540 Hz	0.2 to 5 s
Phase	Sequence	ΔØ	ØA-ØB-ØC or ØA-ØC-ØB	Instantaneous

Table 26: Micrologic 5.0P and 6.0P Trip Unit Settings for Current and Power Load-Shedding

		Pickup		Drop-out	
		Threshold	Time Delay	Threshold	Time Delay
Current	I	0.5 to 1.0 x I_r Per Phase	20% to 80% x t_r	0.3 to 1.0 x I_r per phase	10 to 600 s
Power	P	200 kW to 10 MW	10 to 3600 s	100 kW to 10 MW	10 to 3600 s

Micrologic P trip units are designed to be used with an external 24 Vdc power supply. Current-based protection functions require no auxiliary power source.

© 2001–2009 Schneider Electric
All Rights Reserved

Table 27: Micrologic P Use of External 24 Vdc Power Supply

Function	Without 24 Vdc Power Supply at F1 and F2	With 24 Vdc Power Supply at F1 and F2
Fault Protection for LSIG Functions	Yes	Yes
LED Trip Indication	Yes	Yes
LCD Display and Backlight are Functional	Yes[1]	Yes
Ground-Fault Push-to-Trip Button Works for Testing Ground Fault[2]	Yes[1]	Yes
Metering, Monitoring, and History Logs are Functional	Yes[1]	Yes
Communications Between Trip Unit and M2C and M6C Programmable Contact Modules	No	Yes
Operation of M6C Programmable Contact Module	No	Yes, with separate 24 Vdc power supply for the module
Modbus® Communications	No	Yes, with separate 24 Vdc power supply for the circuit breaker communication module

1 If circuit breaker has 100 Vac or more between two phases or phase to neutral and is bottom fed or closed in a top fed application.

2 Ground-fault push-to-trip button will also be functional if hand-held test kit or full-function test kit is powering the trip unit.

Tripping and Alarm Histories

The last ten trips and ten alarms are recorded in two separate history files that can be displayed on the screen (sample displays are shown).

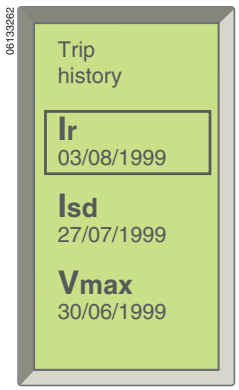

Trip History

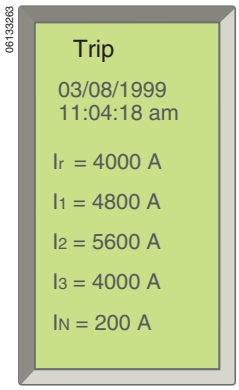

Alarm History

The following information is contained in these files:

Trip History

- Type of fault
- Date and time of fault
- Interrupted current

Alarm History

- Type of alarm
- Date and time of alarm
- Values measured at time of alarm

Metering

The Micrologic P trip unit calculates in real time the electrical values V, A, W, VAR, VA, Wh, VARh, VAh, Hz, power factor and crest factor. It also calculates demand current and power over an adjustable time period.

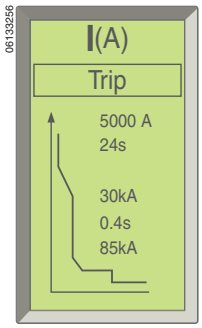

Current Metering

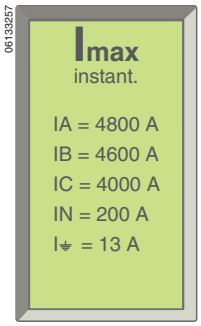

Maximum Current

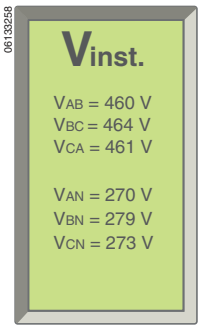

Voltage Metering

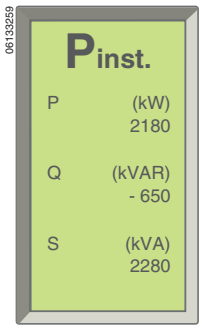

Power Metering

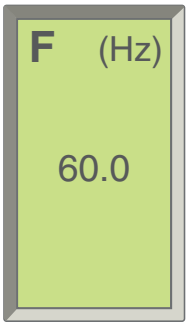

Frequency

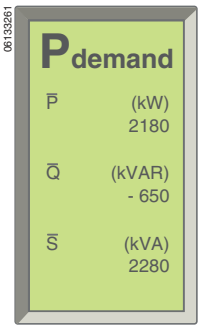

Power Demand

© 2001–2009 Schneider Electric
All Rights Reserved

Catalog Numbers

Table 36: UL/IEC Rated, Unit-Mount[1], Manually-Operated, Standard-Rated Electronic Trip Circuit Breakers with Basic Electronic Trip and Micrologic® Electronic Trip Unit

Trip Unit		Circuit Breaker Catalog Number (Prefix Required)						
		Prefix	Current Rating (Sensor Rating)					
	Type		250 A	400 A	600 A	800 A	1000 A	1200 A
Basic Electronic Trip Unit (Not Interchangeable)	ET1.0I 2P[2], 3P Fixed Long-time	PGL	—	—	36060	36080	36100	36120
		PJL	—	—	36060	36080	36100	36120
		PKL	—	—	36060	36080	36100	36120
		PLL	—	—	34060	34080	34100	34120
Micrologic Interchangeable Standard Trip Unit	3.0 (LI) 3P, 4P[3] (G & K only)	PGL	36025U31A	36040U31A	36060U31A	36080U31A	36100U31A	36120U31A
		PJL	36025U31A	36040U31A	36060U31A	36080U31A	36100U31A	36120U31A
		PKL	36025U31A	36040U31A	36060U31A	36080U31A	36100U31A	36120U31A
		PLL[4]	34025U31A	34040U31A	34060U31A	34080U31A	34100U31A	34120U31A
	5.0 (LSI) 3P 4P[3] (G & K only)	PGL	36025U33A	36040U33A	36060U33A	36080U33A	36100U33A	36120U33A
		PJL	36025U33A	36040U33A	36060U33A	36080U33A	36100U33A	36120U33A
		PKL	36025U33A	36040U33A	36060U33A	36080U33A	36100U33A	36120U33A
		PLL[4]	34025U33A	34040U33A	34060U33A	34080U33A	34100U33A	34120U33A
Micrologic Interchangeable Ammeter Trip Unit[5]	3.0A (LI) 3P 4P[3] (G & K only)	PGL	36025U41A	36040U41A	36060U41A	36080U41A	36100U41A	36120U41A
		PJL	36025U41A	36040U41A	36060U41A	36080U41A	36100U41A	36120U41A
		PKL	36025U41A	36040U41A	36060U41A	36080U41A	36100U41A	36120U41A
		PLL[4]	34025U41A	34040U41A	34060U41A	34080U41A	34100U41A	34120U41A
	5.0A (LSI) 3P 4P[3] (G & K only)	PGL	36025U43A	36040U43A	36060U43A	36080U43A	36100U43A	36120U43A
		PJL	36025U43A	36040U43A	36060U43A	36080U43A	36100U43A	36120U43A
		PKL	36025U43A	36040U43A	36060U43A	36080U43A	36100U43A	36120U43A
		PLL[4]	34025U43A	34040U43A	34060U43A	34080U43A	34100U43A	34120U43A
	6.0A (LSIG) 3P 4P[3] (G & K only)	PGL	36025U44A	36040U44A	36060U44A	36080U44A	36100U44A	36120U44A
		PJL	36025U44A	36040U44A	36060U44A	36080U44A	36100U44A	36120U44A
		PKL	36025U44A	36040U44A	36060U44A	36080U44A	36100U44A	36120U44A
		PLL[4]	34025U44A	34040U44A	34060U44A	34080U44A	34100U44A	34120U44A
Micrologic Interchangeable Power Trip Unit with Modbus® Communications	5.0P (LSI) 3P 4P[3] (G & K only)	PGL	36025U63AE1	36040U63AE1	36060U63AE1	36080U63AE1	36100U63AE1	36120U63AE1
		PJL	36025U63AE1	36040U63AE1	36060U63AE1	36080U63AE1	36100U63AE1	36120U63AE1
		PKL	36025U63AE1	36040U63AE1	36060U63AE1	36080U63AE1	36100U63AE1	36120U63AE1
		PLL[4]	34025U63AE1	34040U63AE1	34060U63AE1	34080U63AE1	34100U63AE1	34120U63AE1
	6.0P (LSIG) 3P 4P[3] (G & K only)	PGL	36025U64AE1	36040U64AE1	36060U64AE1	36080U64AE1	36100U64AE1	36120U64AE1
		PJL	36025U64AE1	36040U64AE1	36060U64AE1	36080U64AE1	36100U64AE1	36120U64AE1
		PKL	36025U64AE1	36040U64AE1	36060U64AE1	36080U64AE1	36100U64AE1	36120U64AE1
		PLL[4]	34025U64AE1	34040U64AE1	34060U64AE1	34080U64AE1	34100U64AE1	34120U64AE1
Micrologic Interchangeable Harmonic Trip Unit with Modbus Communications	5.0H (LSI) 3P 4P[3] (G & K only)	PGL	36025U73AE1	36040U73AE1	36060U73AE1	36080U73AE1	36100U73AE1	36120U73AE1
		PJL	36025U73AE1	36040U73AE1	36060U73AE1	36080U73AE1	36100U73AE1	36120U73AE1
		PKL	36025U73AE1	36040U73AE1	36060U73AE1	36080U73AE1	36100U73AE1	36120U73AE1
		PLL[4]	34025U73AE1	34040U73AE1	34060U73AE1	34080U73AE1	34100U73AE1	34120U73AE1
	6.0H (LSIG) 3P 4P[3] (G & K only)	PGL	36025U74AE1	36040U74AE1	36060U74AE1	36080U74AE1	36100U74AE1	36120U74AE1
		PJL	36025U74AE1	36040U74AE1	36060U74AE1	36080U74AE1	36100U74AE1	36120U74AE1
		PKL	36025U74AE1	36040U74AE1	36060U74AE1	36080U74AE1	36100U74AE1	36120U74AE1
		PLL[4]	34025U74AE1	34040U74AE1	34060U74AE1	34080U74AE1	34100U74AE1	34120U74AE1

1 Catalog numbers are for circuit breakers with lugs on line and load ends. Consult the *Product Selector* for catalog numbers for circuit breakers with alternate terminations.

2 For 2P, replace the leading 3 in the catalog number following the prefix with a 2 (PGL36025 becomes PGL26025.)

3 For 4P, replace the leading 3 in the catalog number following the prefix with a 4 (PGL36025U31A becomes PGL46025U31A).

4 The L interrupting rating at 600 Vac is 25 kA

5 Add E1 suffix for Modbus communications.

© 2001–2009 Schneider Electric
All Rights Reserved

Table 37: UL/IEC Rated, Unit-Mount[1], Manually-Operated, 100%-Rated Electronic Trip Circuit Breakers with Micrologic® Electronic Trip Units

Trip Unit, Interchangeable 3P, 4P		Circuit Breaker Catalog Number (Prefix Required)						
		Prefix	Current Rating (Sensor Rating)					
	Type		250 A	400 A	600 A	800 A	1000 A	1200 A
Micrologic Standard Trip Unit	3.0 (LI) 3P 4P[2] (G & K only)	PGL	36025CU31A	36040CU31A	36060CU31A	36080CU31A	36100CU31A	36120CU31A
		PJL	36025CU31A	36040CU31A	36060CU31A	36080CU31A	36100CU31A	36120CU31A
		PKL	36025CU31A	36040CU31A	36060CU31A	36080CU31A	36100CU31A	36120CU31A
		PLL[3]	34025CU31A	34040CU31A	34060CU31A	34080CU31A	34100CU31A	34120CU31A
	5.0 (LSI) 3P 4P[2] (G & K only)	PGL	36025CU33A	36040CU33A	36060CU33A	36080CU33A	36100CU33A	36120CU33A
		PJL	36025CU33A	36040CU33A	36060CU33A	36080CU33A	36100CU33A	36120CU33A
		PKL	36025CU33A	36040CU33A	36060CU33A	36080CU33A	36100CU33A	36120CU33A
		PLL[3]	34025CU33A	34040CU33A	34060CU33A	34080CU33A	34100CU33A	34120CU33A
Micrologic Ammeter Trip Unit[4]	3.0A (LI) 3P 4P[2] (G & K only)	PGL	36025CU41A	36040CU41A	36060CU41A	36080CU41A	36100CU41A	36120CU41A
		PJL	36025CU41A	36040CU41A	36060CU41A	36080CU41A	36100CU41A	36120CU41A
		PKL	36025CU41A	36040CU41A	36060CU41A	36080CU41A	36100CU41A	36120CU41A
		PLL[3]	34025CU41A	34040CU41A	34060CU41A	34080CU41A	34100CU41A	34120CU41A
	5.0A (LSI) 3P 4P[2] (G & K only)	PGL	36025CU43A	36040CU43A	36060CU43A	36080CU43A	36100CU43A	36120CU43A
		PJL	36025CU43A	36040CU43A	36060CU43A	36080CU43A	36100CU43A	36120CU43A
		PKL	36025CU43A	36040CU43A	36060CU43A	36080CU43A	36100CU43A	36120CU43A
		PLL[3]	34025CU43A	34040CU43A	34060CU43A	34080CU43A	34100CU43A	34120CU43A
	6.0A (LSIG) 3P 4P[2] (G & K only)	PGL	36025CU44A	36040CU44A	36060CU44A	36080CU44A	36100CU44A	36120CU44A
		PJL	36025CU44A	36040CU44A	36060CU44A	36080CU44A	36100CU44A	36120CU44A
		PKL	36025CU44A	36040CU44A	36060CU44A	36080CU44A	36100CU44A	36120CU44A
		PLL[3]	34025CU44A	34040CU44A	34060CU44A	34080CU44A	34100CU44A	34120CU44A
Micrologic Power Trip Unit with Modbus® Communications	5.0P (LSI) 3P 4P[2] (G & K only)	PGL	36025CU63AE1	36040CU63AE1	36060CU63AE1	36080CU63AE1	36100CU63AE1	36120CU63AE1
		PJL	36025CU63AE1	36040CU63AE1	36060CU63AE1	36080CU63AE1	36100CU63AE1	36120CU63AE1
		PKL	36025CU63AE1	36040CU63AE1	36060CU63AE1	36080CU63AE1	36100CU63AE1	36120CU63AE1
		PLL[3]	34025CU63AE1	34040CU63AE1	34060CU63AE1	34080CU63AE1	34100CU63AE1	34120CU63AE1
	6.0P (LSIG) 3P 4P[2] (G & K only)	PGL	36025CU64AE1	36040CU64AE1	36060CU64AE1	36080CU64AE1	36100CU64AE1	36120CU64AE1
		PJL	36025CU64AE1	36040CU64AE1	36060CU64AE1	36080CU64AE1	36100CU64AE1	36120CU64AE1
		PKL	36025CU64AE1	36040CU64AE1	36060CU64AE1	36080CU64AE1	36100CU64AE1	36120CU64AE1
		PLL[3]	34025CU64AE1	34040CU64AE1	34060CU64AE1	34080CU64AE1	34100CU64AE1	34120CU64AE1
Micrologic Harmonic Trip Unit with Modbus Communications	5.0H (LSI) 3P 4P[2] (G & K only)	PGL	36025CU73AE1	36040CU73AE1	36060CU73AE1	36080CU73AE1	36100CU73AE1	36120CU73AE1
		PJL	36025CU73AE1	36040CU73AE1	36060CU73AE1	36080CU73AE1	36100CU73AE1	36120CU73AE1
		PKL	36025CU73AE1	36040CU73AE1	36060CU73AE1	36080CU73AE1	36100CU73AE1	36120CU73AE1
		PLL[3]	34025CU73AE1	34040CU73AE1	34060CU73AE1	34080CU73AE1	34100CU73AE1	34120CU73AE1
	6.0H (LSIG) 3P 4P[2] (G & K only)	PGL	36025CU74AE1	36040CU74AE1	36060CU74AE1	36080CU74AE1	36100CU74AE1	36120CU74AE1
		PJL	36025CU74AE1	36040CU74AE1	36060CU74AE1	36080CU74AE1	36100CU74AE1	36120CU74AE1
		PKL	36025CU74AE1	36040CU74AE1	36060CU74AE1	36080CU74AE1	36100CU74AE1	36120CU74AE1
		PLL[3]	34025CU74AE1	34040CU74AE1	34060CU74AE1	34080CU74AE1	34100CU74AE1	34120CU74AE1

1 Catalog numbers are for circuit breakers with lugs on line and load ends. Consult the product selector for catalog numbers for circuit breakers with alternate terminations.

2 For 4P, replace the leading 3 in the catalog number following the prefix with a 4 (PGL36024CU31A becomes PGL46024CU31A).

3 The L interrupting rating at 600 Vac is 25 kA.

4 Add E1 suffix for Modbus communications.

© 2001–2009 Schneider Electric
All Rights Reserved

Table 38: UL/IEC Rated, I-Line, Manually-Operated, Standard-Rated Electronic Trip Circuit Breakers with Basic Electronic Trip and Micrologic® Electronic Trip Units

Trip Unit		Circuit Breaker Catalog Number (Prefix Required)						
		Prefix	Current Rating (Sensor Rating)					
	Type[1]		250 A	400 A	600 A	800 A	1000 A	1200 A
Basic Electronic Trip Unit Not Interchangeable	ET1.0I 2P[2], 3P Fixed Long-time	PGA	—	—	36060	36080	36100	36120
		PJA	—	—	36060	36080	36100	36120
		PKA	—	—	36060	36080	36100	36120
		PLA	—	—	34060	34080	34100	34120
Micrologic Interchangeable Standard Trip Unit	3.0 (LI) 3P	PGA	36025U31A	36040U31A	36060U31A	36080U31A	36100U31A	36120U31A
		PJA	36025U31A	36040U31A	36060U31A	36080U31A	36100U31A	36120U31A
		PKA	36025U31A	36040U31A	36060U31A	36080U31A	36100U31A	36120U31A
		PLA[3]	34025U31A	34040U31A	34060U31A	34080U31A	34100U31A	34120U31A
	5.0 (LSI) 3P	PGA	36025U33A	36040U33A	36060U33A	36080U33A	36100U33A	36120U33A
		PJA	36025U33A	36040U33A	36060U33A	36080U33A	36100U33A	36120U33A
		PKA	36025U33A	36040U33A	36060U33A	36080U33A	36100U33A	36120U33A
		PLA[3]	34025U33A	34040U33A	34060U33A	34080U33A	34100U33A	34120U33A
Micrologic Interchangeable Ammeter Trip Unit[4]	3.0A (LI) 3P	PGA	36025U41A	36040U41A	36060U41A	36080U41A	36100U41A	36120U41A
		PJA	36025U41A	36040U41A	36060U41A	36080U41A	36100U41A	36120U41A
		PKA	36025U41A	36040U41A	36060U41A	36080U41A	36100U41A	36120U41A
		PLA[3]	34025U41A	34040U41A	34060U41A	34080U41A	34100U41A	34120U41A
	5.0A (LSI) 3P	PGA	36025U43A	36040U43A	36060U43A	36080U43A	36100U43A	36120U43A
		PJA	36025U43A	36040U43A	36060U43A	36080U43A	36100U43A	36120U43A
		PKA	36025U43A	36040U43A	36060U43A	36080U43A	36100U43A	36120U43A
		PLA[3]	34025U43A	34040U43A	34060U43A	34080U43A	34100U43A	34120U43A
	6.0A (LSIG) 3P	PGA	36025U44A	36040U44A	36060U44A	36080U44A	36100U44A	36120U44A
		PJA	36025U44A	36040U44A	36060U44A	36080U44A	36100U44A	36120U44A
		PKA	36025U44A	36040U44A	36060U44A	36080U44A	36100U44A	36120U44A
		PLA[3]	34025U44A	34040U44A	34060U44A	34080U44A	34100U44A	34120U44A
Micrologic Interchangeable Power Trip Unit with Modbus® Communications	5.0P (LSI) 3P	PGA	36025U63AE1	36040U63AE1	36060U63AE1	36080U63AE1	36100U63AE1	36120U63AE1
		PJA	36025U63AE1	36040U63AE1	36060U63AE1	36080U63AE1	36100U63AE1	36120U63AE1
		PKA	36025U63AE1	36040U63AE1	36060U63AE1	36080U63AE1	36100U63AE1	36120U63AE1
		PLA[3]	34025U63AE1	34040U63AE1	34060U63AE1	34080U63AE1	34100U63AE1	34120U63AE1
	6.0P (LSIG) 3P	PGA	36025U64AE1	36040U64AE1	36060U64AE1	36080U64AE1	36100U64AE1	36120U64AE1
		PJA	36025U64AE1	36040U64AE1	36060U64AE1	36080U64AE1	36100U64AE1	36120U64AE1
		PKA	36025U64AE1	36040U64AE1	36060U64AE1	36080U64AE1	36100U64AE1	36120U64AE1
		PLA[3]	34025U64AE1	34040U64AE1	34060U64AE1	34080U64AE1	34100U64AE1	34120U64AE1
Micrologic Interchangeable Harmonic Trip Unit with Modbus Communications	5.0H (LSI) 3P	PGA	36025U73AE1	36040U73AE1	36060U73AE1	36080U73AE1	36100U73AE1	36120U73AE1
		PJA	36025U73AE1	36040U73AE1	36060U73AE1	36080U73AE1	36100U73AE1	36120U73AE1
		PKA	36025U73AE1	36040U73AE1	36060U73AE1	36080U73AE1	36100U73AE1	36120U73AE1
		PLA[3]	34025U73AE1	34040U73AE1	34060U73AE1	34080U73AE1	34100U73AE1	34120U73AE1
	6.0H (LSIG) 3P	PGA	36025U74AE1	36040U74AE1	36060U74AE1	36080U74AE1	36100U74AE1	36120U74AE1
		PJA	36025U74AE1	36040U74AE1	36060U74AE1	36080U74AE1	36100U74AE1	36120U74AE1
		PKA	36025U74AE1	36040U74AE1	36060U74AE1	36080U74AE1	36100U74AE1	36120U74AE1
		PLA[3]	34025U74AE1	34040U74AE1	34060U74AE1	34080U74AE1	34100U74AE1	34120U74AE1

1 For 3P, no suffix is for ABC phasing (standard offer), or use 6 for CBA phasing (option).

2 For 2P, replace the leading 3 in the catalog number following the prefix with a 2 (PGA36025 becomes PGA26025). Add the suffix 2 for AC phasing (standard offer), or use 5 for CA phasing (option).

3 The L interrupting rating at 600 Vac is 25 kA

4 Add E1 suffix for Modbus communications.

© 2001–2009 Schneider Electric
All Rights Reserved

Table 39: UL/IEC Rated, I-Line, Manually-Operated, 100%-Rated Electronic Trip Circuit Breakers with Micrologic® Electronic Trip Units

Trip Unit, Interchangeable		Circuit Breaker				
		Type	Current Rating (Sensor Rating)			
	Type[1]		250 A	400 A	600 A	800 A
Micrologic Standard Trip Unit	3.0 (LI) 3P	PGA	**36025CU31A**	**36040CU31A**	**36060CU31A**	**36080CU31A**
		PJA	**36025CU31A**	**36040CU31A**	**36060CU31A**	**36080CU31A**
		PKA	**36025CU31A**	**36040CU31A**	**36060CU31A**	**36080CU31A**
		PLA[2]	**34025CU31A**	**34040CU31A**	**34060CU31A**	**34080CU31A**
	5.0 (LSI) 3P	PGA	**36025CU33A**	**36040CU33A**	**36060CU33A**	**36080CU33A**
		PJA	**36025CU33A**	**36040CU33A**	**36060CU33A**	**36080CU33A**
		PKA	**36025CU33A**	**36040CU33A**	**36060CU33A**	**36080CU33A**
		PLA[2]	**34025CU33A**	**34040CU33A**	**34060CU33A**	**34080CU33A**
Micrologic Ammeter Trip Unit[3]	3.0A (LI) 3P	PGA	**36025CU41A**	**36040CU41A**	**36060CU41A**	**36080CU41A**
		PJA	**36025CU41A**	**36040CU41A**	**36060CU41A**	**36080CU41A**
		PKA	**36025CU41A**	**36040CU41A**	**36060CU41A**	**36080CU41A**
		PLA[2]	**34025CU41A**	**34040CU41A**	**34060CU41A**	**34080CU41A**
	5.0A (LSI) 3P	PGA	**36025CU43A**	**36040CU43A**	**36060CU43A**	**36080CU43A**
		PJA	**36025CU43A**	**36040CU43A**	**36060CU43A**	**36080CU43A**
		PKA	**36025CU43A**	**36040CU43A**	**36060CU43A**	**36080CU43A**
		PLA[2]	**34025CU43A**	**34040CU43A**	**34060CU43A**	**34080CU43A**
	6.0A (LSIG) 3P	PGA	**36025CU44A**	**36040CU44A**	**36060CU44A**	**36080CU44A**
		PJA	**36025CU44A**	**36040CU44A**	**36060CU44A**	**36080CU44A**
		PKA	**36025CU44A**	**36040CU44A**	**36060CU44A**	**36080CU44A**
		PLA[2]	**34025CU44A**	**34040CU44A**	**34060CU44A**	**34080CU44A**
Micrologic Power Trip Unit with Modbus® Communications	5.0P (LSI) 3P	PGA	**36025CU63AE1**	**36040CU63AE1**	**36060CU63AE1**	**36080CU63AE1**
		PJA	**36025CU63AE1**	**36040CU63AE1**	**36060CU63AE1**	**36080CU63AE1**
		PKA	**36025CU63AE1**	**36040CU63AE1**	**36060CU63AE1**	**36080CU63AE1**
		PLA[2]	**34025CU63AE1**	**34040CU63AE1**	**34060CU63AE1**	**34080CU63AE1**
	6.0P (LSIG) 3P	PGA	**36025CU64AE1**	**36040CU64AE1**	**36060CU64AE1**	**36080CU64AE1**
		PJA	**36025CU64AE1**	**36040CU64AE1**	**36060CU64AE1**	**36080CU64AE1**
		PKA	**36025CU64AE1**	**36040CU64AE1**	**36060CU64AE1**	**36080CU64AE1**
		PLA[2]	**34025CU64AE1**	**34040CU64AE1**	**34060CU64AE1**	**34080CU64AE1**
Micrologic Harmonic Trip Unit with Modbus Communications	5.0H (LSI) 3P	PGA	**36025CU73AE1**	**36040CU73AE1**	**36060CU73AE1**	**36080CU73AE1**
		PJA	**36025CU73AE1**	**36040CU73AE1**	**36060CU73AE1**	**36080CU73AE1**
		PKA	**36025CU73AE1**	**36040CU73AE1**	**36060CU73AE1**	**36080CU73AE1**
		PLA[2]	**34025CU73AE1**	**34040CU73AE1**	**34060CU73AE1**	**34080CU73AE1**
	6.0H (LSIG) 3P	PGA	**36025CU74AE1**	**36040CU74AE1**	**36060CU74AE1**	**36080CU74AE1**
		PJA	**36025CU74AE1**	**36040CU74AE1**	**36060CU74AE1**	**36080CU74AE1**
		PKA	**36025CU74AE1**	**36040CU74AE1**	**36060CU74AE1**	**36080CU74AE1**
		PLA[2]	**34025CU74AE1**	**34040CU74AE1**	**34060CU74AE1**	**34080CU74AE1**

1 No suffix is for ABC phasing (standard offer), or use 6 for CBA phasing (option).

2 The L interrupting rating at 600 Vac is 25 kA

3 Add E1 suffix for Modbus communications.

Table 40: P-Frame Termination Options

F = No Lugs (Includes terminal nut kit on both ends)
L = Lugs both ends
M = Lugs I/ON end, terminal nut kit O/OFF end
P = Lugs O/OFF end, terminal nut kit I/ON end
D = Drawout
A = I-Line

For factory-installed termination, place termination letter in the third block of the circuit breaker catalog number.

P G L 3 6 0 4 0 U 4 1 A
└Termination Letter

Table 41: P-Frame Interrupting Ratings

Voltage	P-Frame Interrupting Rating			
	G	J	K	L
240 Vac	65 kA	100 kA	65 kA	125 kA
480 Vac	35 kA	65 kA	50 kA	100 kA
600 Vac	18 kA	25 kA	50 kA	25 kA

© 2001–2009 Schneider Electric
All Rights Reserved

Figure 2: Accessory Control Wiring Diagrams for Manually-operated Circuit Breakers

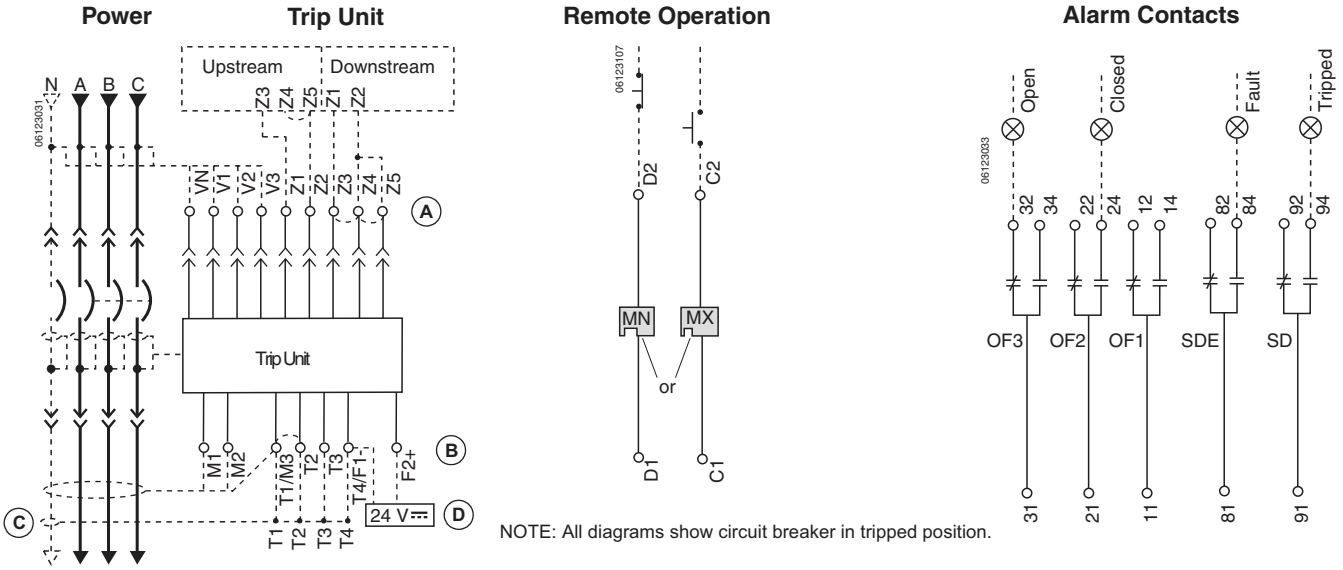

NOTE: All diagrams show circuit breaker in tripped position.

A–Do not remove factory-installed jumpers between Z3, Z4 and Z5 unless ZSI is connected.
B–Do not remove factory-installed jumper between T1 and T2 unless neutral CT is connected. Do not install jumper between T3 and T4.
C–For proper wiring of neutral CT, refer to Instruction Bulletin 48041-082-01 shipped with it.
D–24 Vdc power supply for trip unit must be separate and isolated from 24 Vdc power supply for communication modules.

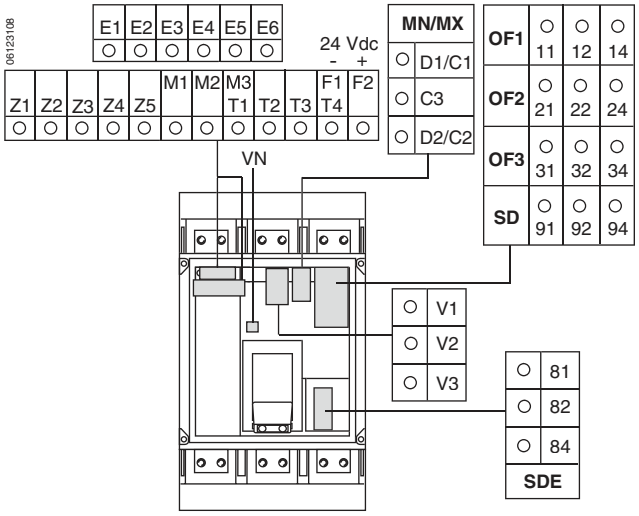

Connector	Recommended Wire Size
V1, V2, V3, Vn	22–16 AWG (0.3–1.5 mm²)
E1–E2	22 AWG (0.3 mm²) MIN shielded pair cable or twisted pair copper wires
T	22 AWG (0.3 mm²) stranded shielded cable
M	Refer to MDGF instructions
E3–E6, Q1, Q2, Q3	22 AWG (0.3 mm²) shielded twisted pairs with drain (Belden 8723 or equal)[3]
OF, SD, SDE	18–16 AWG (0.8–1.5 mm²)
MN, MX	18–14 AWG (0.8–2.5 mm²)
F	Size per aux 24 Vdc power supply
Z1–Z5	22–18 AWG (0.3–0.8 mm²)

Trip Unit Type					
Basic	A	P	H	Connector	Description
—	•	•	•	Com: E1-E6	Circuit breaker communication module E1 = +24 Vdc E2 = Common E3 = Out - E4 = Out + E5 = In - E6 = In +
—	•	•	•	Z	Zone-selective interlocking (ZSI) Z1 = ZSI OUT signal Z2 = ZSI OUT Z3 = ZSI IN signal Z4 = ZSI IN short-time delay Z5 = ZSI IN ground fault
—	•	•	•	T	External neutral sensor
—	•	•	•	F	24 Vdc external power supply
—	—	•	•	Vn[1]	External neutral voltage takeoff
—	—	•	•	V1, V2, V3	External phase voltage takeoff
—	—	•	•	M6C[2]: Q1, Q2, Q3	6 programmable contacts 24 Vdc external power supply required

Function	Connector	Description
Auxiliary Contacts	OF	Open/Closed circuit breaker or switch position contacts
	SD	Bell alarm
	SDE	Electrical fault alarm contact
Remote Operation	MN	Undervoltage trip device
	MX	Shunt trip

1 Neutral voltage supplied with flying leads.
2 Optional M6C programmable contacts are supplied with flying leads.

© 2001–2009 Schneider Electric
All Rights Reserved

Figure 11: P-Frame and NS630b–NS1600 Individually-Mounted 3P Circuit Breaker ≤ 800 A with Lugs on Both Ends

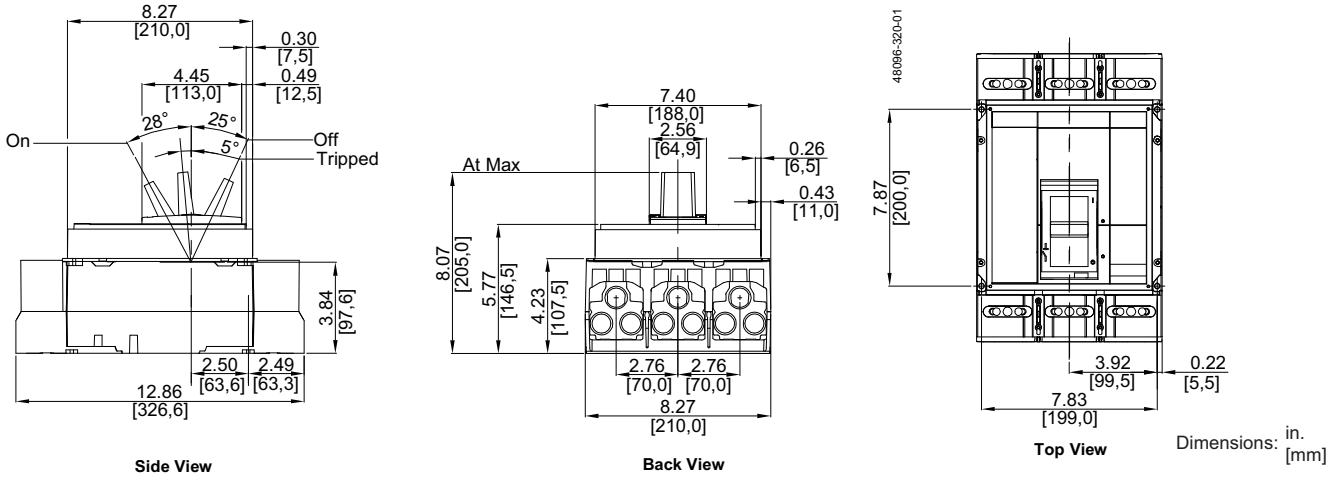

Figure 12: P-Frame and NS630b–NS1600 Individually-Mounted 4P Circuit Breaker ≤ 800 A with Lugs on Both Ends

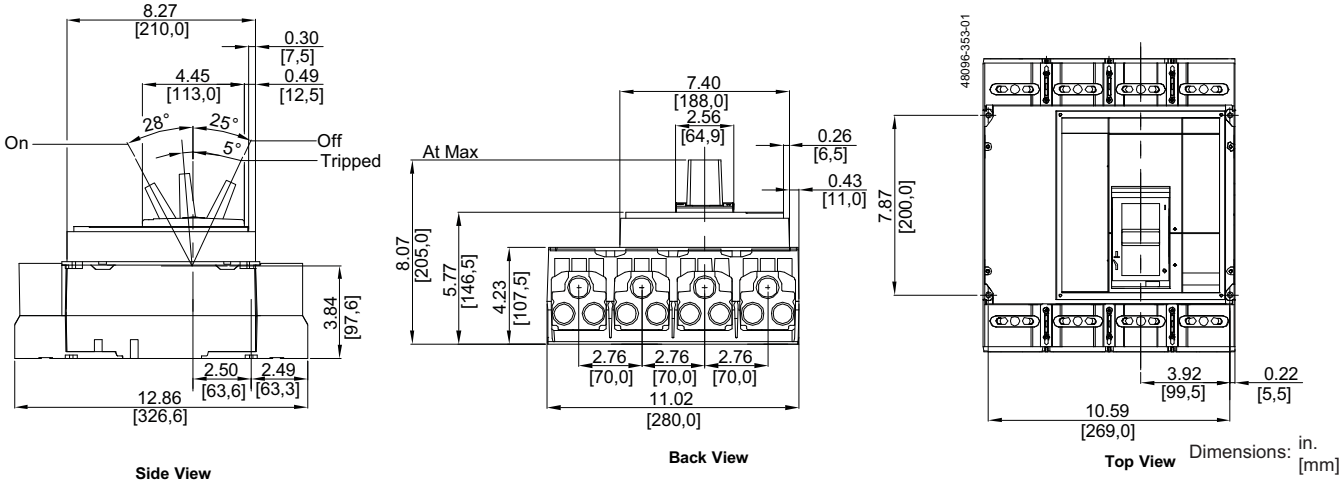

© 2001–2009 Schneider Electric
All Rights Reserved

Figure 13: P-Frame and NS630b–NS1600 Individually-Mounted 3P Circuit Breaker > 800 A with Lugs on Both Ends

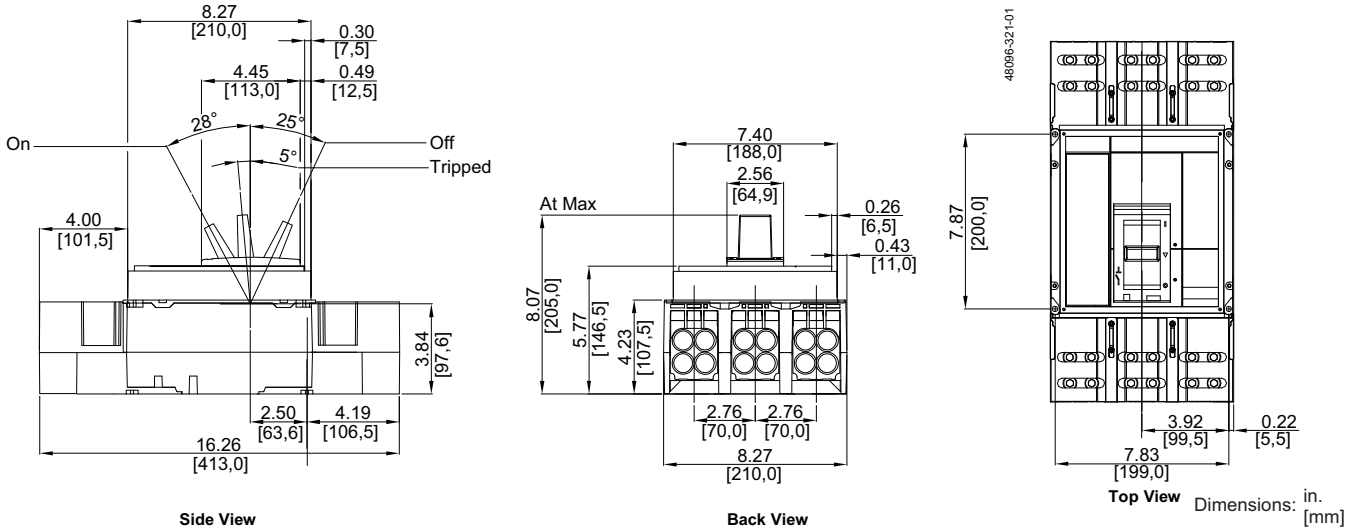

Figure 14: P-Frame and NS630b–NS1600 Individually-Mounted 4P Circuit Breaker > 800 A with Lugs on Both Ends

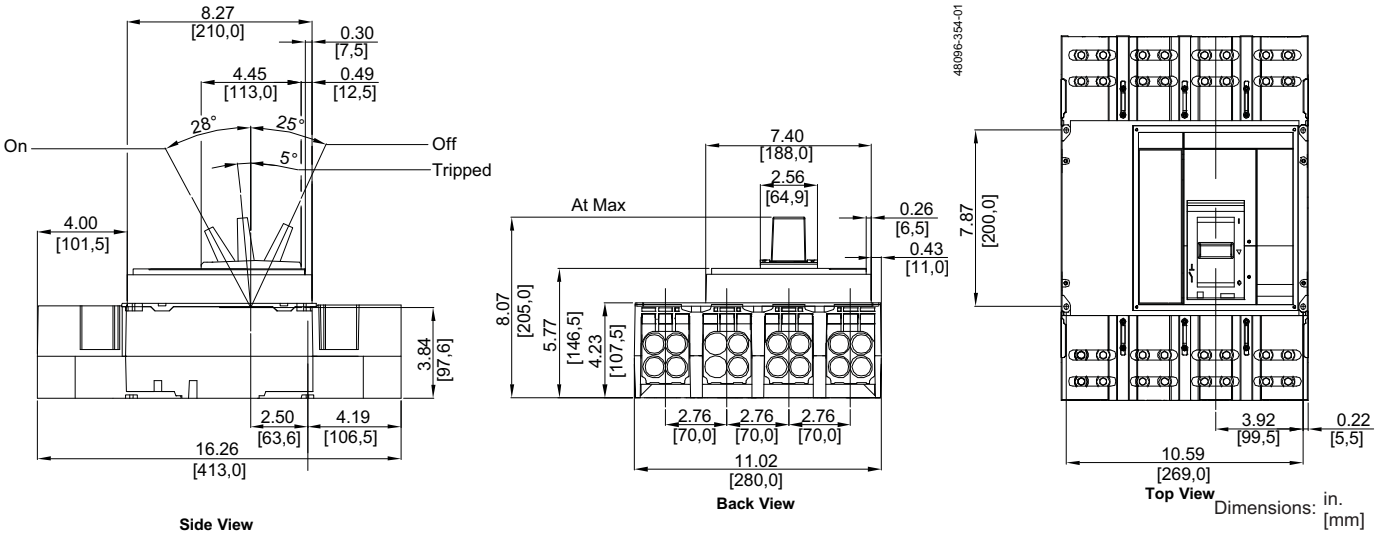

© 2001–2009 Schneider Electric
All Rights Reserved

Micrologic 3.0A P-Frame and R-Frame Trip Unit Characteristic Trip Curve

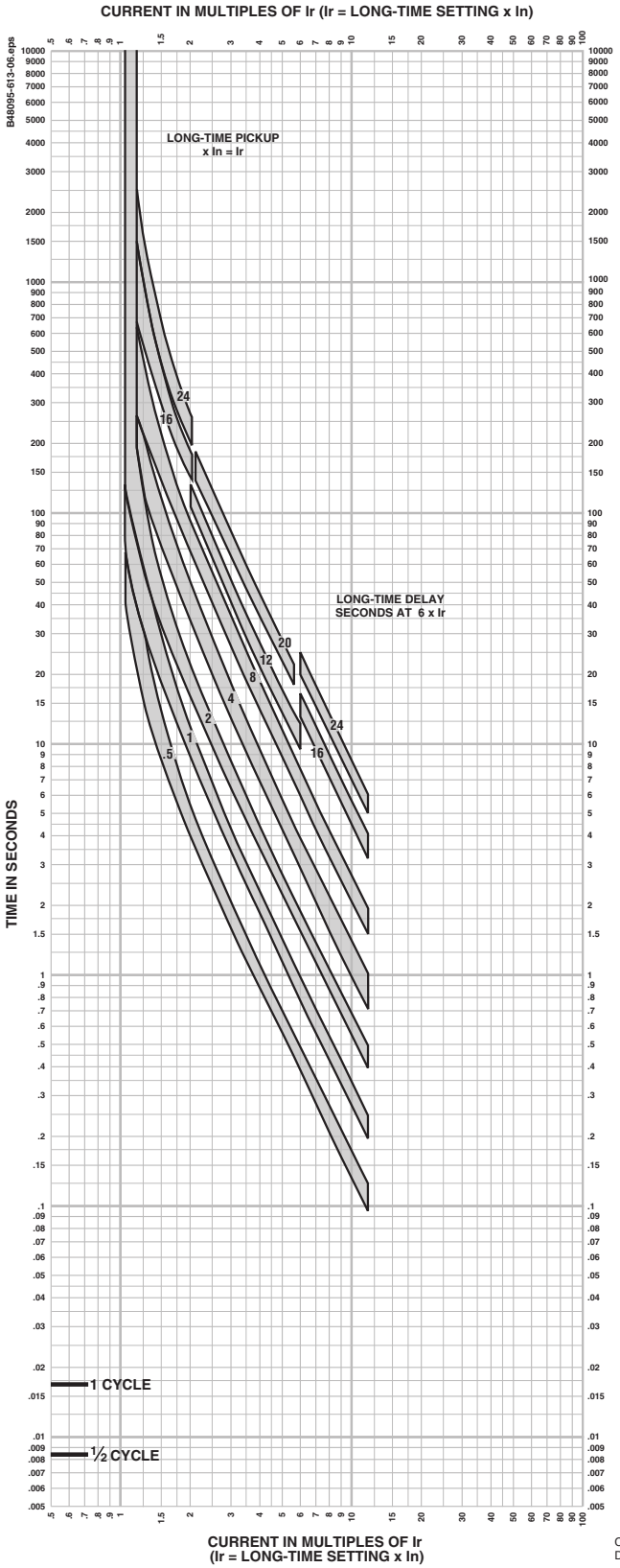

Curve No. 0613TC0006
Drawing No. B48095-613-06

Micrologic 3.0A Trip Unit

Long-Time Pickup and Delay

The time-current curve information is to be used for application and coordination purposes only.

Notes:

1. There is a thermal-imaging effect that can act to shorten the long-time delay. The thermal-imaging effect comes into play if a current above the long-time delay pickup value exists for a time and then is cleared by the tripping of a downstream device or the circuit breaker itself. A subsequent overload will cause the circuit breaker to trip in a shorter time than normal. The amount of time delay reduction is inverse to the amount of time that has elapsed since the previous overload. Approximately twenty minutes is required between overloads to completely reset thermal-imaging.
2. The end of the curve is determined by the instantaneous setting of the circuit breaker.
3. Total clearing times shown include the response times of the trip unit, the circuit breaker opening, and the extinction of current.
4. See trip curve 613-8 on page 131 for instantaneous pickup trip curve.

© 2001–2009 Schneider Electric
All Rights Reserved

Micrologic 3.0A P-Frame and R-Frame Trip Unit Characteristic Trip Curve

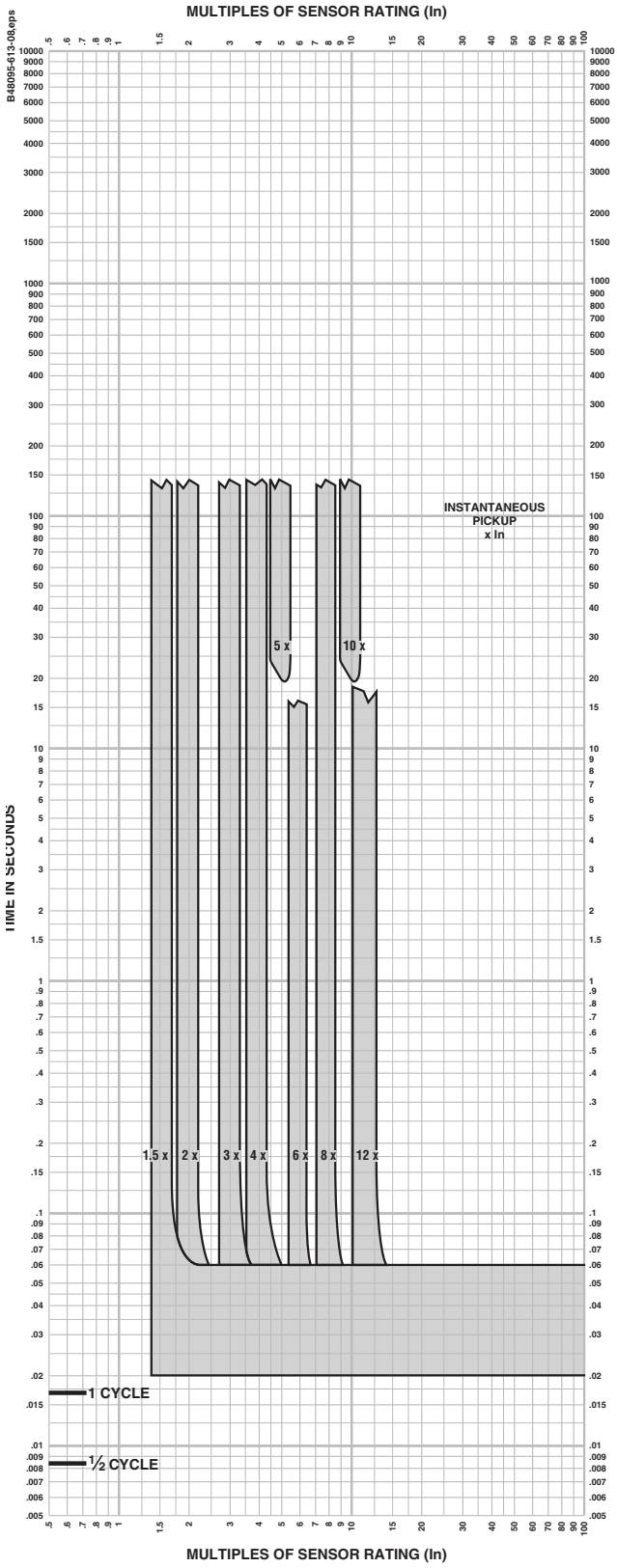

Curve No. 0613TC0008
Drawing No. B48095-613-08

Micrologic 3.0A Trip Unit

Instantaneous Pickup, 1.5X to 12X

Characteristic Trip Curve No. 613-8

The time-current curve information is to be used for application and coordination purposes only.

Notes:

1. The end of the curve is determined by the interrupting rating of the circuit breaker.
2. Total clearing times shown include the response times of the trip unit, the circuit breaker opening, and the extinction of current.
3. The instantaneous region of the trip curve shows maximum total clearing times. Actual clearing times in this region can vary depending on the circuit breaker mechanism design and other factors. The actual clearing time can be considerably faster than indicated. Contact your local sales office for additional information.
4. See trip curve 613-6 on page 130 for long-time pickup and delay trip curves.

© 2001–2009 Schneider Electric
All Rights Reserved

Micrologic 5.0/6.0 P-Frame, R-Frame and NS630b–NS3200 A/P/H Trip Unit Characteristic Trip Curve

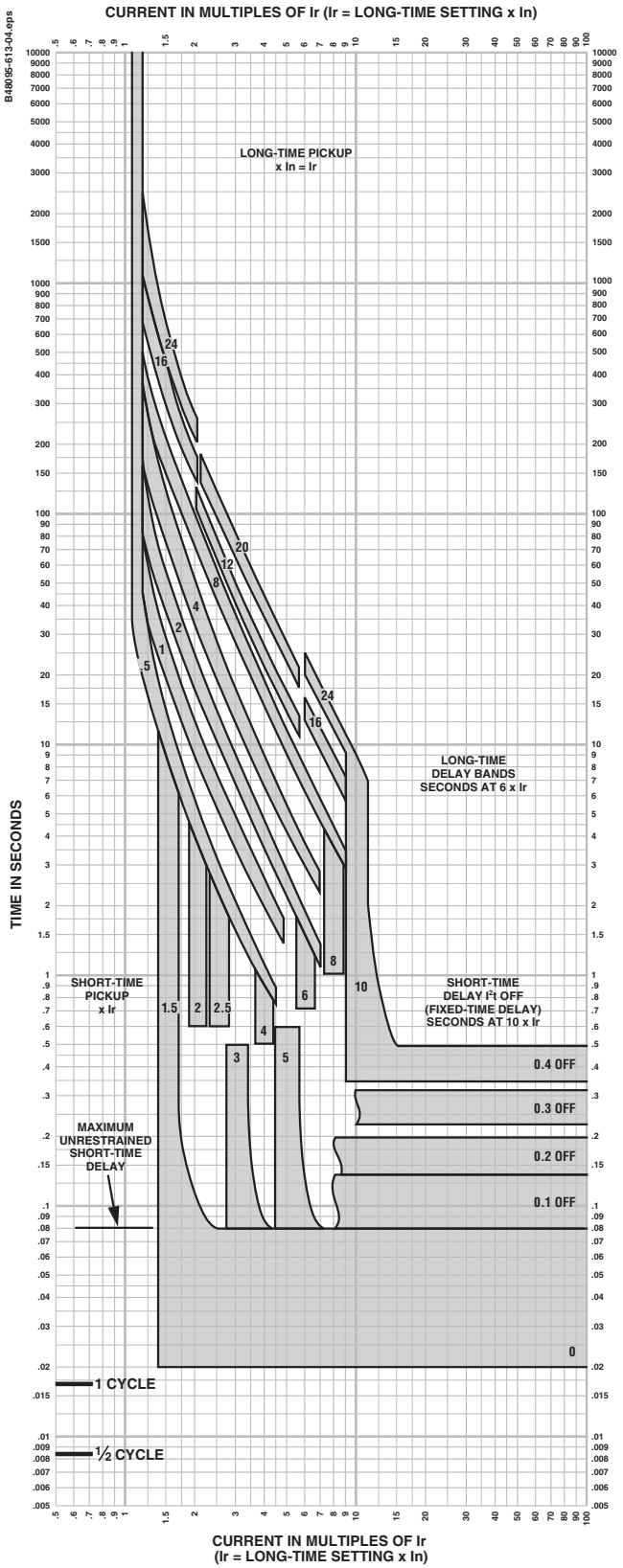

Curve No. 0613TC0004
Drawing No. B48095-613-04

Micrologic 5.0/6.0 A/P/H Trip Units

Long-Time Pickup and Delay
Short-Time Pickup and I^2t OFF Delay
The time-current curve information is to be used for application and coordination purposes only.

Notes:

1. There is a thermal-imaging effect that can act to shorten the long-time delay. The thermal-imaging effect comes into play if a current above the long-time delay pickup value exists for a time and then is cleared by the tripping of a downstream device or the circuit breaker itself. A subsequent overload will cause the circuit breaker to trip in a shorter time than normal. The amount of time delay reduction is inverse to the amount of time that has elapsed since the previous overload. Approximately twenty minutes is required between overloads to completely reset thermal-imaging.
2. The end of the curve is determined by the interrupting rating of the circuit breaker.
3. With zone-selective interlocking ON, short-time delay utilized, and no restraining signal, the maximum unrestrained short-time delay time band applies regardless of the setting.
4. Total clearing times shown include the response times of the trip unit, the circuit breaker opening, and the extinction of the current.
5. For a withstand circuit breaker, instantaneous can be turned OFF. See trip curve 613-7 on page 134 for instantaneous trip curve. See table on page 138 for instantaneous override values.
6. Overload indicator illuminates at 100%.

© 2001–2009 Schneider Electric
All Rights Reserved

Micrologic 5.0/6.0 P-Frame, R-Frame and NS630b–NS3200 A/P/H Trip Units Characteristic Trip Curve

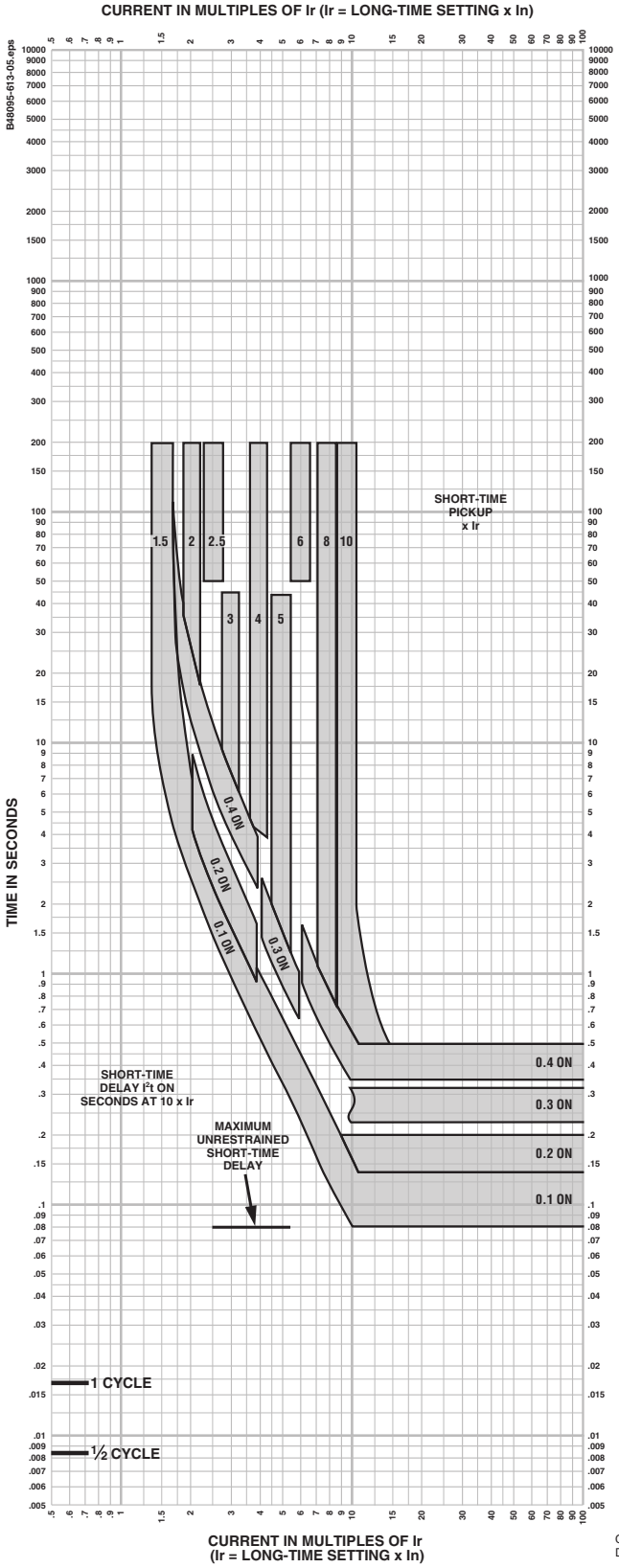

Curve No. 0613TC0005
Drawing No. B48095-613-05

Micrologic 5.0/6.0 A/P/H Trip Units

Short-Time Pickup and I^2t ON Delay

The time-current curve information is to be used for application and coordination purposes only.

Notes:

1. There is a thermal-imaging effect that can act to shorten the long-time delay. The thermal-imaging effect comes into play if a current above the long-time delay pickup value exists for a time and then is cleared by the tripping of a downstream device or the circuit breaker itself. A subsequent overload will cause the circuit breaker to trip in a shorter time than normal. The amount of time delay reduction is inverse to the amount of time that has elapsed since the previous overload. Approximately twenty minutes is required between overloads to completely reset thermal-imaging.
2. The end of the curve is determined by the interrupting rating of the circuit breaker.
3. With zone-selective interlocking ON, short-time delay utilized, and no restraining signal, the maximum unrestrained short-time delay time band applies regardless of the setting.
4. Total clearing times shown include the response times of the trip unit, the circuit breaker opening, and the extinction of current.
5. For withstand circuit breaker, instantaneous can be turned OFF. See trip curve 613-7 on page 134 for instantaneous trip curve. See table on page 138 for instantaneous override values.
6. See Trip Curve 613-4 on page 132 for long-time pickup and delay trip curve.

© 2001–2009 Schneider Electric
All Rights Reserved

Micrologic 5.0/6.0 P-Frame, R-Frame and NS630b–NS3200 A/P/H Trip Units Characteristic Trip Curve

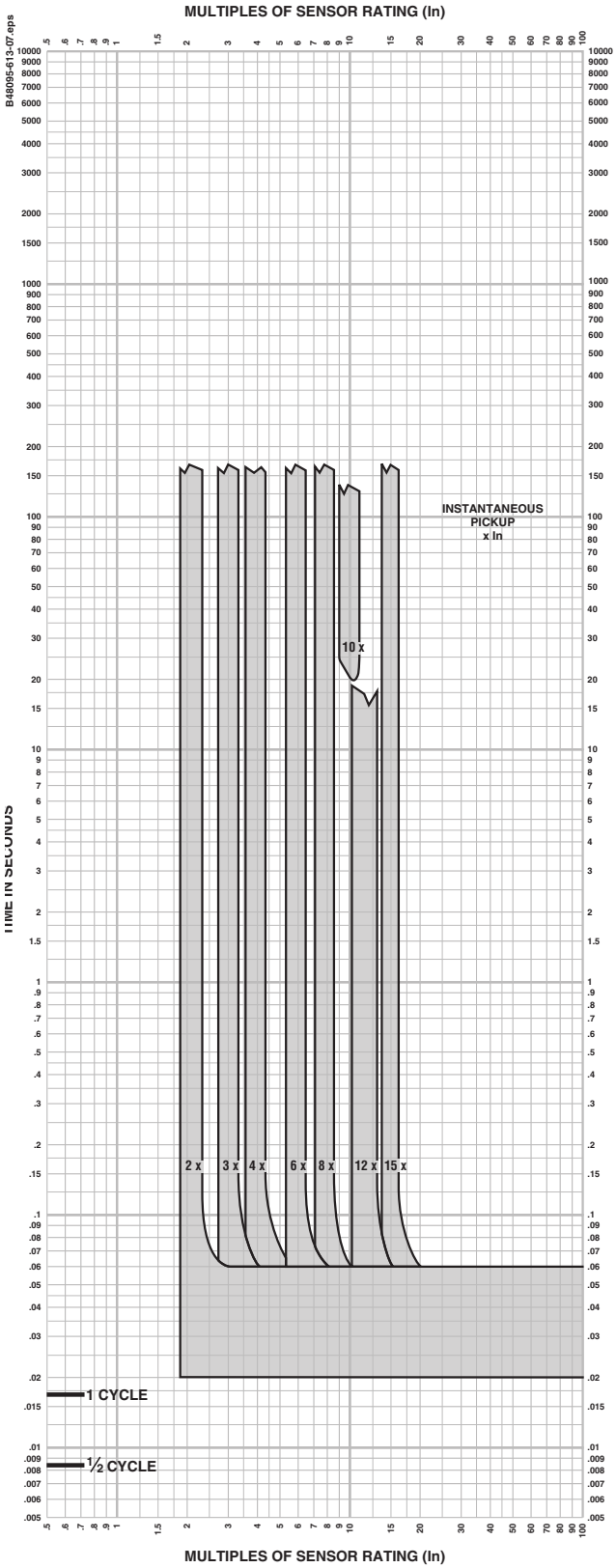

Curve No. 0613TC0007
Drawing No. B48095-613-07

Micrologic 5.0/6.0 Trip Units

Instantaneous Pickup, 2X to 15X and OFF

The time-current curve information is to be used for application and coordination purposes only.

Curves apply from -30°C to +60°C (-

Notes:

1. The end of the curve is determined by the interrupting rating of the circuit breaker.
2. Total clearing times shown include the response times of the trip unit, the circuit breaker opening, and the extinction of current.
3. The instantaneous region of the trip curve shows maximum total clearing times. Actual clearing times in this region can vary depending on the circuit breaker mechanism design and other factors. The actual clearing time can be considerably faster than indicated. Contact your local sales office for additional information.
4. For a withstand circuit breaker, instantaneous can be turned OFF. See trip curve 613-7 on page 134 for the instantaneous trip curve. See table on page 138 for the instantaneous override values.
5. See trip curve 613-4 on page 132 and trip curve 613-5 on page 133 for long-time pickup, long-time delay, short-time pickup and short-time delay trip curves.

© 2001–2009 Schneider Electric
All Rights Reserved

Micrologic 6.0 P-Frame, R-Frame and NS630b–NS3200 A/P/H Trip Units with Adjustable Ground-fault Pickup and Delay Characteristic Trip Curve

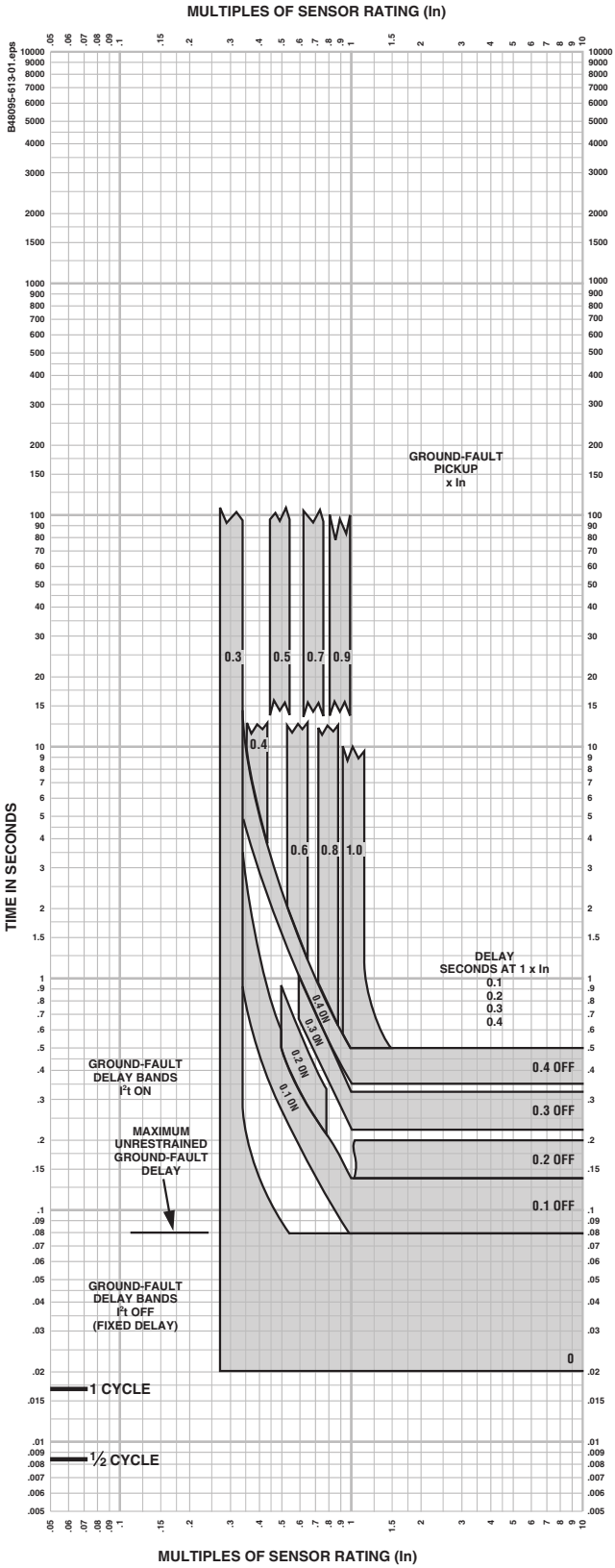

Micrologic 6.0 A/P/H Trip Units with Adjustable Ground-Fault Pickup and Delay

Ground Fault I^2t OFF and ON

$I_n \leq 400$ A

The time-current curve information is to be used for application and coordination purposes only.

Curve No. 0613TC0001
Drawing No. B48095-613-01

© 2001–2009 Schneider Electric
All Rights Reserved

Micrologic 6.0 P-Frame, R-Frame and NS630b–NS3200 A/P/H Trip Units with Adjustable Ground-fault Pickup and Delay Characteristic Trip Curve

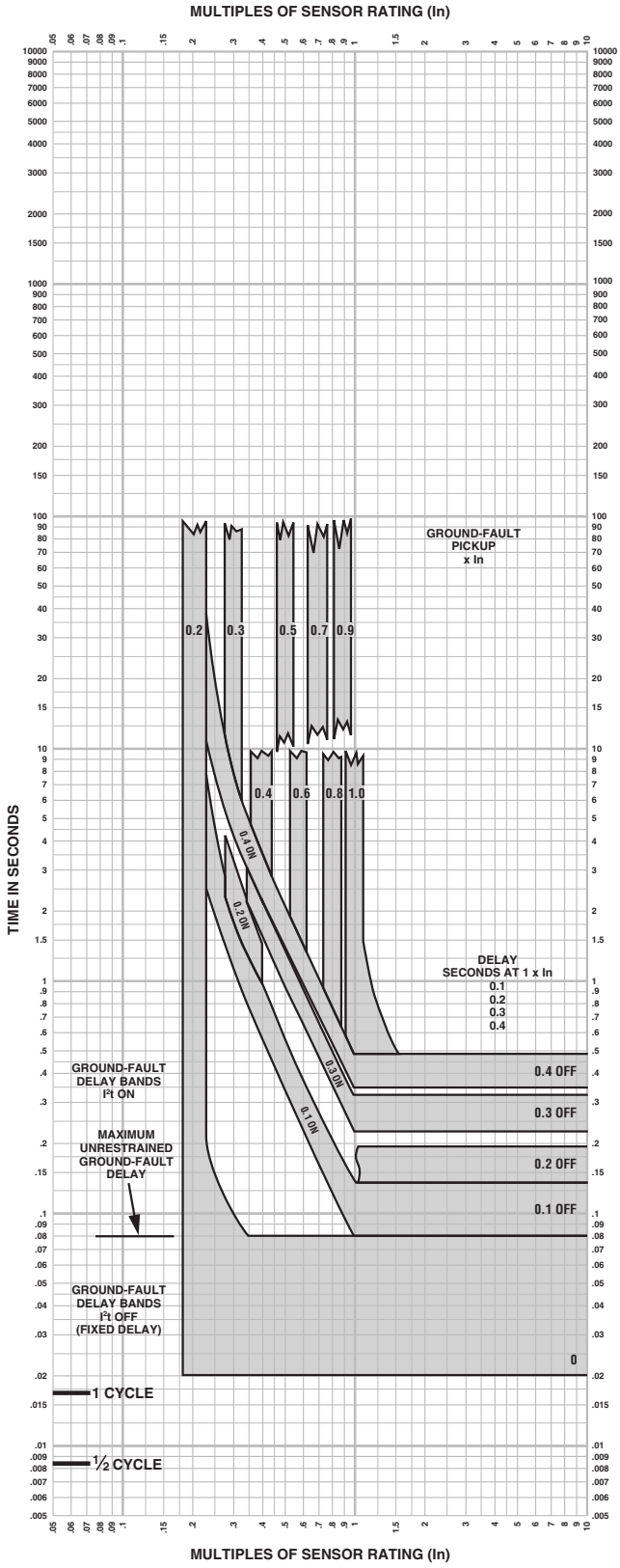

Curve No. 0613TC0002
Drawing No. B48095-613-02

Micrologic 6.0 A/P/H Trip Units with Adjustable Ground-Fault Pickup and Delay

Ground Fault I^2t OFF and ON

The time-current curve information is to be used for application and coordination purposes only.

Curves apply from -30°C to +60°C (-

© 2001–2009 Schneider Electric
All Rights Reserved

Micrologic 6.0 P-Frame, R-Frame and NS630b–NS3200 A/P/H Trip Units with Adjustable Ground-fault Pickup and Delay Characteristic Trip Curve

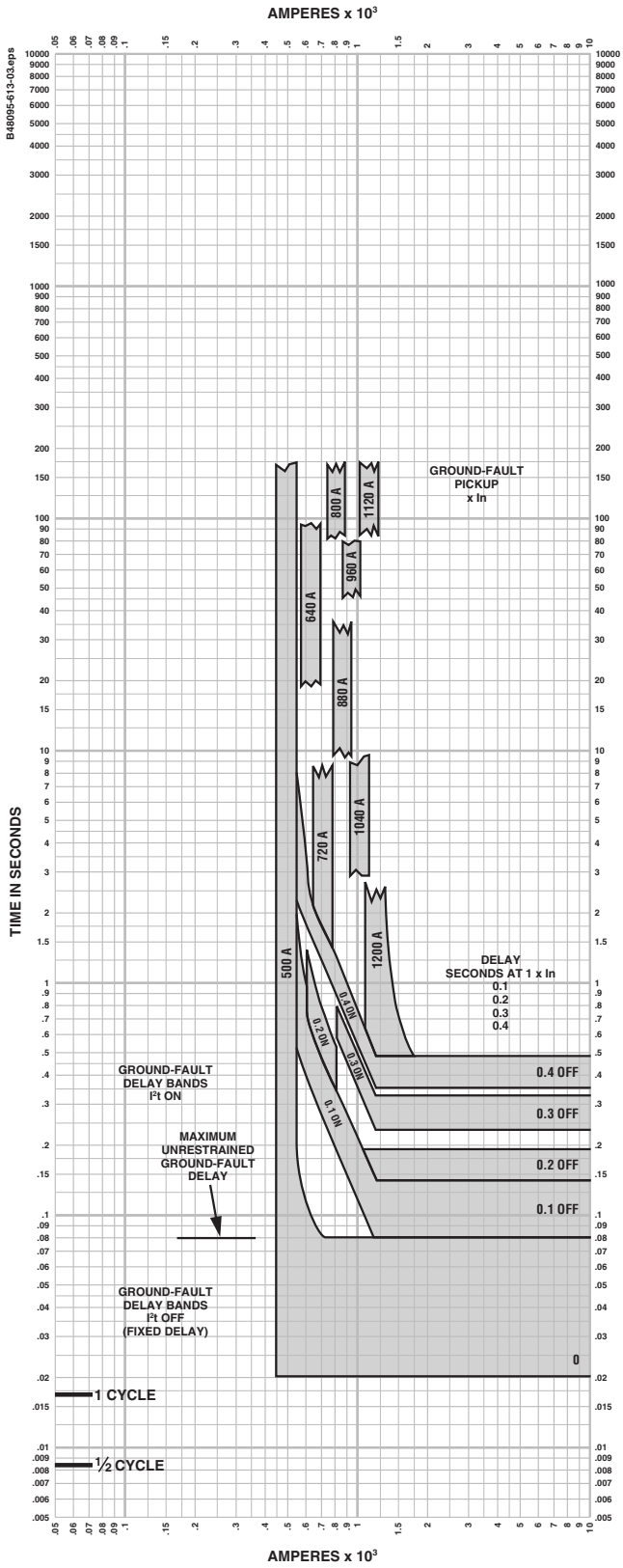

Micrologic 6.0 A/P/H Trip Units with Adjustable Ground-Fault Pickup and Delay

Ground Fault I^2t OFF and ON

The time-current curve information is to be used for application and coordination purposes only.

Curves apply from -30°C to +60°C (-22°F to +140°F) ambient temperature.

Curve No. 0613TC0003
Drawing No. B48095-613-03

© 2001–2009 Schneider Electric
All Rights Reserved

Four-stage battery charger

15 amp @ 12 volt

12 amp @ 24 volt

> Specification sheet

Our energy working for you.™

Cummins Power Generation

Description

Cummins Power Generation fully automatic battery chargers - using switched mode power electronics - are constant voltage/constant current chargers incorporating a 4-stage charging algorithm. Designed for use in applications where battery life and reliability are important; these chargers, complete with built-in equalize charge capability, are ideal for stationary or portable starting battery charging service.

To achieve optimum battery life, a 4-stage charging cycle is implemented. The four charging stages are trickle, bulk, absorption and float. The trickle stage safely charges overly discharged batteries. It protects a damaged or shorted battery from excessive current. During bulk charge a constant current is applied to quickly restore the maximum battery charge level in the shortest amount of time. The absorption stage applies a constant voltage to the battery to bring the battery to 100% capacity. The float stage tailors the constant voltage output to maintain the battery at full capacity while serving DC operated loads.

An optional temperature sensor may be used to adjust charging rate based on internal battery temperature in the absorption and float stages. Use of a battery temperature sensor helps to increase battery life by preventing over or under charging of the battery. The battery temperature sensor also protects the battery from overheating. Temperature compensation is recommended in all applications, but is particularly valuable for generator sets in outdoor applications.

Battery chargers are field-configurable for charging either 12 or 24 VDC battery systems and for operation at 50 or 60 Hz. Output voltage and battery type selection is done through the alphanumeric display.

Features

Protection - All models include a 20 amp DC output breaker. Re-settable breakers are used for input voltages 240 VAC and lower. For over 240 VAC branch circuit rated fuses are used.

Easy installation - Clearly marked terminal blocks and panel knockouts provide convenient connections of input and output leads.

User display - Output voltage and current, fault information and configuration options are indicated on the alphanumeric display.

Monitoring - An LED indicates the condition of the charger. Green indicates normal charging operation, amber indicates equalizing and red indicates a fault condition.

Adjustable float voltage – Float voltage can be set through the alpha-numeric display for optimum battery performance and life.

Temperature compensation - An optional external sensor is available for temperature compensated battery charging.

Faults - The charger senses and annunciates the following fault conditions: Input overvoltage, input undervoltage, AC power loss, battery overvoltage, battery undervoltage, charger circuitry over temperature, battery over temperature, unrecoverable battery and overload/overcurrent. Includes 30 volt/2 amp isolated contact for common alarm.

Parallel redundant operation - Chargers can be operated in parallel for redundant reliability or additional charging capacity.

Vibration resistant design - complies with UL 991 vibration resistance requirements.

UL 1236 (BBHH) Listing - for use with lead acid batteries in generator set installations. Also suitable for use with NiCad, gel and AGM batteries.

©2008 | Cummins Power Generation Inc. | All rights reserved | Specifications subject to change without notice | Cummins Power Generation and Cummins are registered trademarks of Cummins Inc. "Our energy working for you." is a trademark of Cummins Power Generation.

Specifications

Performance and physical characteristics

Output:	Nominal voltage	12 or 24 VDC
	Float voltage – 12 V batteries	12.8, 13.0, 13.3, 13.5, 13.6, 14.3
	Float voltage – 24 V batteries	25.7, 26.1, 26.6, 27.0, 27.2, 28.6
	Equalize-voltage	15.5 or 31.0 VDC
	Output voltage regulation	±1%
	Maximum output current	15 A @ 12 VDC or 12 A @ 24 VDC
	Equalize charger time	0-12 hrs
Input:	Voltage AC	120, 208, 240, 277, 380, 416, 480, 600
	Frequency	50 or 60 Hz
Approximate net weights:		11.6 lbs (5.3 Kg)
Approximate dimensions: height x width x depth - in (mm)		9.75 x 5.56 x 6.14 (248 x 141 x 156)
Ambient temperature operation:		-22 °F to 122 °F (-30 °C to 50 °C)

Input volts	Genset kit part number	ATS kit part number
120/208/240	0300-5878-01	0300-5878-13
277	0300-5878-02	0300-5878-14
380	0300-5878-03	0300-5878-15
416	0300-5878-04	0300-5878-16
480	0300-5878-05	0300-5878-17
600	0300-5878-06	0300-5878-18
Temperature sensor kit	0541-0918	0541-0918

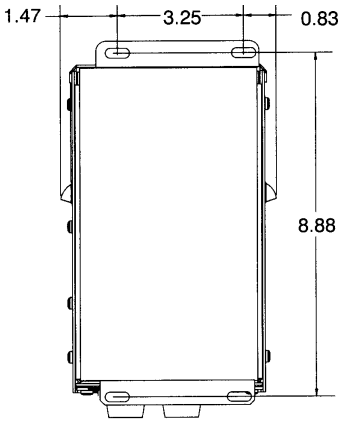

Mounting dimensions – inches
Bottom view

Enclosure

The NEMA 1, corrosion resistant, aluminum enclosure is designed for wall mounting. When wall mounted, louvers protect cooling holes in the sides of the enclosure. Use 1/4 in (6.35 mm) diameter bolts for mounting.

RFI/EMI and voltage surge compliance

Charger complies with the requirements of EN61000-4-5 for voltage surge resistance, EN50082-2 (heavy industrial) for immunity, EN61000-4-2 for ESD, EN61000-4-3 for radiated immunity, ANSI/IEEE C62.41 Category B & EN 61000-4-4 for electrically fast transient, EN61000-4-6 for conducted, and FCC Part 15 Class A for emissions.

Americas
1400 73rd Avenue N.E.
Minneapolis, MN 55432 USA
Phone: 763 574 5000
Fax: 763 574 5298

Europe, CIS, Middle East and Africa
Manston Park Columbus Ave.
Manston Ramsgate
Kent CT 12 5BF United Kingdom
Phone 44 1843 255000
Fax 44 1843 255902

Asia Pacific
10 Toh Guan Road #07-01
TT International Tradepark
Singapore 608838
Phone 65 6417 2388
Fax 65 6417 2399

Warning: Back feed to a utility system can cause electrocution and/or property damage. Do not connect generator sets to any building electrical system except through an approved device or after building main switch is open.

Warning: For professional use only. Must be installed by a qualified service technician. Improper installation presents hazards of electrical shock and improper operation, resulting in severe personal injury and/or property damage.

Our energy working for you.™

www.cumminspower.com

©2008 | Cummins Power Generation Inc. | All rights reserved | Specifications subject to change without notice | Cummins Power Generation and Cummins are registered trademarks of Cummins Inc. "Our energy working for you." is a trademark of Cummins Power Generation.

Cummins Power Generation

Specification sheet

PowerCommand® annunciator discrete input or PCCNet

Description

The Universal Annunciator Module provides visual and audible indication of up to 20 separate alarm or status conditions, based on discrete (relay) inputs or network inputs. Each LED can be controlled by either a discrete wire input or by a signal on the PCCNet network sent from an external device, such as a PCC1301 or PCC2100 (version 2.4 or later) control.

In addition to the LEDs, the annunciator can control four custom relays based on signals received over the PCCNet. When one of the annunciator's discrete inputs is activated, the annunciator will broadcast that information over the network. By taking advantage of the network, discrete inputs and custom relays, the annunciator can be used as expanded I/O for a genset controller.

Easily installed in a location to give immediate notification of an alarm or warning status. Designed to give operating/monitoring personnel quick-glance status information. The module directly senses battery voltage to provide green/yellow/red alarm and status information for that parameter.

Genset controller complies with NFPA level two requirements when used with the display but without the annunciator panel. When used with the annunciator it meets NFPA level one requirements (Emergency and Standby power systems). The annunciator module can also be used for monitoring of transfer switch or other equipment status.

Features

- Visual and audible warnings of up to 20 separate alarm or status conditions.
- LEDs can be controlled either via PCCNet or discrete input.
- Status of discrete inputs is broadcast on network.
- Four custom relays can be controlled over the PCCNet network.
- Configurable LED color (red, yellow or green) and selectable horn operation allows maximum flexibility.
- Standard NFPA 110 label, field configurable for other alarm status and conditions.
- Each audible alarm is annunciated, regardless of the number of existing alarm conditions displayed.
- Sealed membrane panel design provides environmental protection for internal components and is easy to clean.
- Configurable for negative (ground) input or positive input.
- Integral DC voltage sensing.
- Flush or surface mount provisions.
- UL Listed and labeled; CSA certified; CE and UKCA marked.

©2017 Cummins Inc. | S-1472 (02/22)

Specifications

Signal requirements

Positive - Input impedance is 1.82 kOhms to ground; maximum input voltage = 31 VDC.

Negative - Input impedance is 1.82 kOhms to Bat+: inputs are at Bat+ level when open.

Sink/source current threshold for detection - 150 Ua minimum, 3 mA maximum.

Typical conductor size: 16 ga for 304.8 m (1000 ft)

Max conductor size for terminal: 12 ga

Relay outputs

0.2 A at 125 VAC and 1 A at 30 VDC

Network connections

Use Belden 9729 two pair, stranded, shielded 24 AWG twisted pair cable for all PCCNet connections. Total network length cannot exceed 1219 m (4000 ft). Up to 20 nodes can be connected to the network.

Note: Any communications wire connected to the generator set should be stranded cable.

Power

Maximum consumption: 15 watts

Battery voltage

Functional range - Audible and visual conditions operational from 6.5 to 31 VDC.

Low voltage setting - 12.0 VDC for 12 Volt nominal systems; 24.0 for 24 Volt nominal systems.

High voltage setting - 16.0 Volt for 12 Volt nominal systems; 32.0 Volt for 24 Volt nominal systems.

Alarm horn

Sound level: 90 dB at 30 cm

Physical

Weight (with enclosure): 1.4 kg (3.0 lbs)

Temperature

-20 °C to +70 °C (-4 °F to +158 °F)

Humidity

10% to 95% RH (non-condensing)

Default lamp configurations

Can be configured for current NFPA 110 standard or as a replacement for Legacy (pre-2001) NFPA 110 annunciator (300-4510 or 300 4511)

		NFPA 110		
Lamp	**Description**	**Color**	**Horn**	**Flash**
DS1	Customer fault 1	Green	No	No
DS2	Customer fault 2	Amber	No	No
DS3	Customer fault 3	Red	No	No
DS4	Genset supplying load	Amber	No	No
DS5	Charger AC failure	Amber	Yes	No
DS6	Low coolant level	Amber	Yes	No
DS7	Low fuel level	Red	Yes	No
DS8	Check generator set	Amber	No	No
DS9	Not in auto	Red	Yes	Yes
DS10	Generator set running	Amber	No	No
DS11	High battery voltage	Amber	Yes	No
DS12	Low battery voltage	Red	Yes	No
DS13	Weak battery	Red	Yes	No
DS14	Fail to start	Red	Yes	No
DS15	Low coolant temp	Red	Yes	No
DS16	Pre-high engine temp	Amber	Yes	No
DS17	High engine temp	Red	Yes	No
DS18	Pre-low oil pressure	Red	Yes	No
DS19	Low oil pressure	Red	Yes	No
DS20	Overspeed	Red	Yes	No

©2017 Cummins Inc. | S-1472 (02/22)

Typical installation

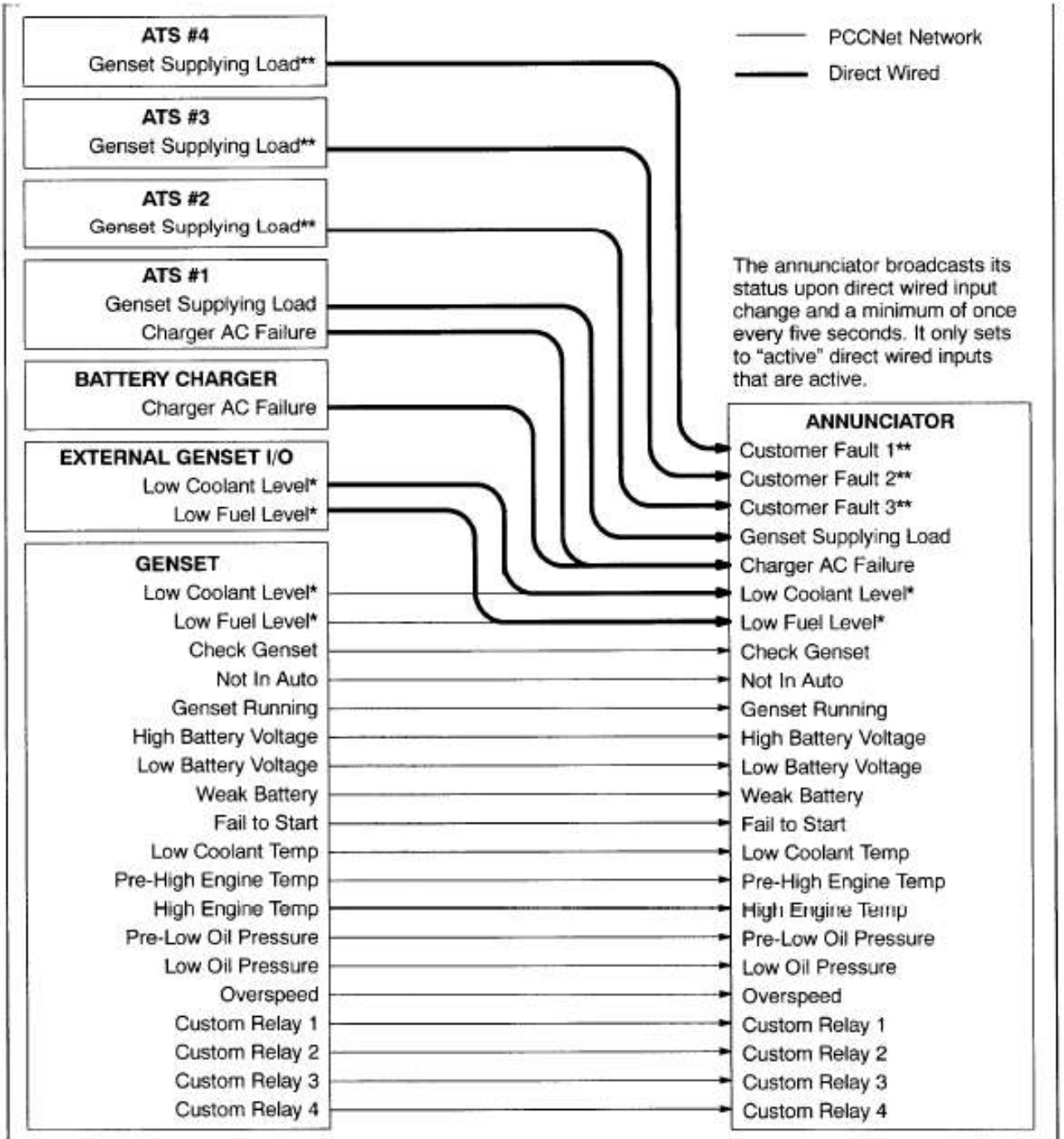

* Low Coolant Level and Low Fuel Level statuses can be either direct wired from External Genset I/O or be part of the PCCNet network status coming from the genset. If direct wired, then the annunciator sets the appropriate bit for the genset to reference.

** These can be Genset Supplying Load 2 thru 4 or Customer Faults.

When enabled, High Battery Voltage, Low Battery Voltage, and Normal Battery Voltage takes precedence over the hardwired input.

Normal Battery voltage can replace Weak Battery.

©2017 Cummins Inc. | S-1472 (02/22)

Dimensions

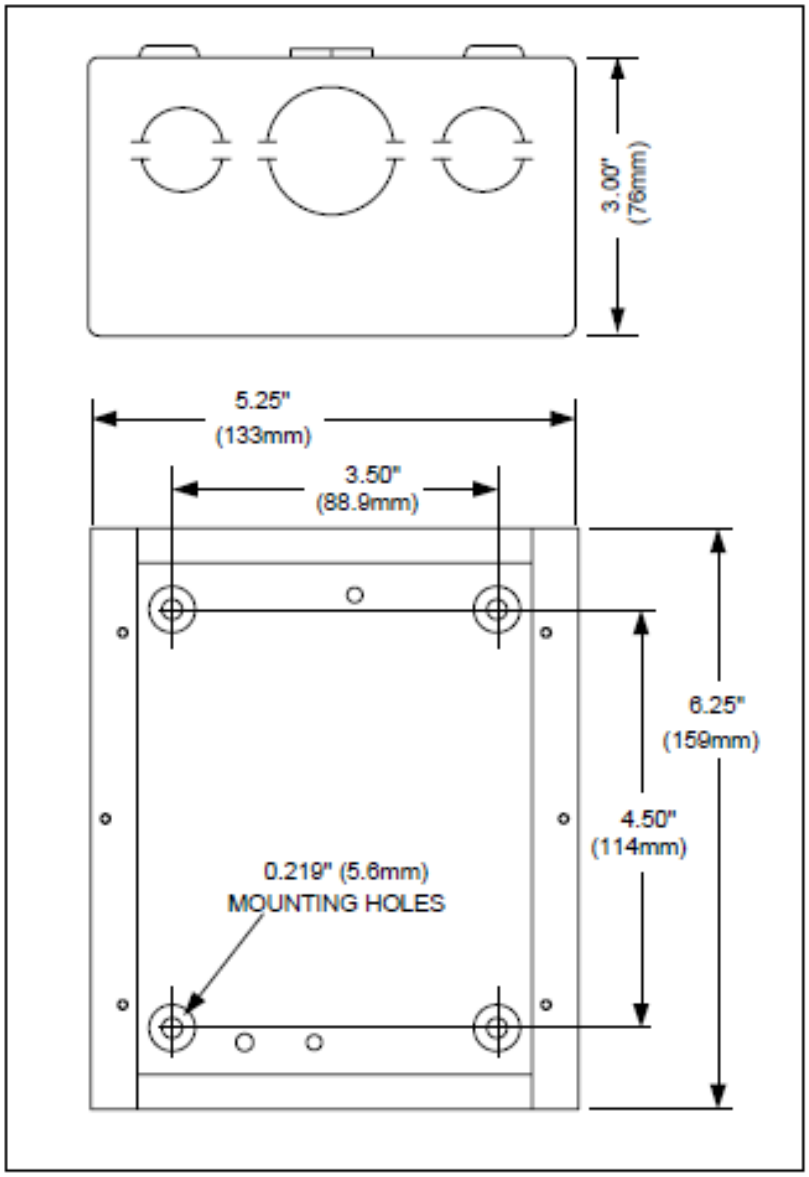

Dimensions: in (mm)

Ordering information

Part number	Description
0300-5929-01	Panel mount
0300-5929-02	Panel with enclosure

For more information contact your local Cummins distributor or visit power.cummins.com

Our energy working for you.™

©2017 Cummins Inc. All rights reserved. Cummins is a registered trademark of Cummins Inc. PowerCommand, AmpSentry, InPower and "Our energy working for you." are trademarks of Cummins Inc. Other company, product, or service names may be trademarks or service marks of others. Specifications are subject to change without notice.
S-1472 (02/22)

OUTDOOR ENCLOSURE

Accessory specification sheet for 250 - 1300 kW Natural gas generator sets (GenSets)

THE RIGHT CHOICE FOR GENSET PROTECTION.

Cummins provides the option of protecting your Cummins Generator Set (GenSet) with UL 2200 Listed weather-protective and sound-attenuated steel enclosures that not only limit the GenSet from producing high decibels of sound, but also protect the GenSet from harsh weather conditions. These enclosures are designed to enclose the entire GenSet while allowing ample air flow for cooling. Several enclosure configurations are available for each GenSet model to suit most weather protection and sound control requirements:

Weather-protective enclosures provide protection from climate conditions and include an internally-mounted exhaust silencer. The exhaust silencer on a weather-protective enclosure reduces noise, but is primarily intended to protect the GenSet from the outdoor environment.

Level I sound-attenuated enclosures provide weather protection and include an internally-mounted exhaust silencer and sound insulating panels. The silencer and the panels reduce the noise level of the GenSet to a level below that achieved with a weather protective enclosure. Level I sound-attenuated enclosures are appropriate for applications where sound reducing enclosures are required.

Level II sound-attenuated enclosures provide weather protection and include an internally-mounted exhaust silencer and sound insulating panels which reduce the noise level of the GenSet to a level below that achieved with a Level I sound-attenuated enclosure. Level II sound-attenuated enclosures are appropriate for applications where sound reducing enclosures are required.

NOTE: Enclosures are designed for outdoor use, only.

Enclosure feature	Standard	Optional
Construction	Galvannealed steel	Aluminum (for corrosive environments)
	Compact footprint	Manufactured floor
	Stainless steel hardware	
	Cambered roof to prevent water accumulation	
	Zinc phosphate pretreatment, e-coat primer, and super durable textured powder topcoat paint to help minimize corrosion and color fade	
	Rain collar and rain cap	
Intake and discharge louvers	Fixed	Motorized intake
		Motorized or gravity discharge
Doors	Two or three (depending on the GenSet dimensions) flush, recessed, and hinged doors per side for service access	
	Doors keyed alike for added security and convenience	
	Weather-protective bulb seals	
Silencer grade	Critical	Hospital
Silencer construction	Stainless steel	Aluminum
Installation	Enclosure directly attached to the GenSet skid base; easy access lifting points	
Wind rating	100 mph	High wind bracing
Electrical	Fuel and electrical stub-up area within enclosure perimeter	
Accessories		DC lights w/timer (2)
		120/240V load center 120/208V load center
		AC lights (2 X AC vapor-proof)
		120V GFI convenience receptacles (2)
		5 kW heater
		External emergency-stop

Level I and Level II sound-attenuated enclosures

For detailed sound data, refer to the GenSet sound data sheet.

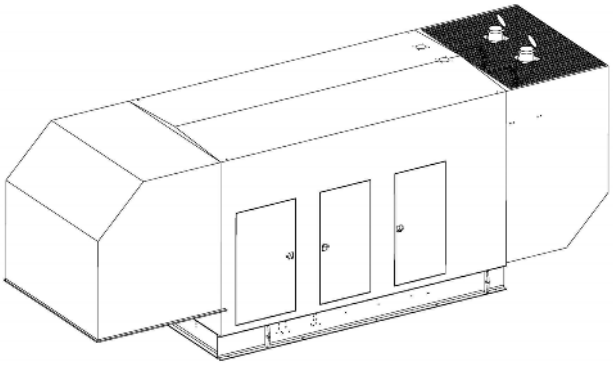

		Level I and Level II sound-attenuated enclosure dimensions and weights				
GenSet model	**GenSet sound data sheet**	**Length in. (cm)**	**Width in. (cm)**	**Height in. (cm)**	**Steel weight lbs. (kg)**	**Aluminum weight lbs. (kg)**
C250N6	MSP-4054	281 (714)	70 (178)	99 (251)	2550 (1157)	1530 (694)
C300N6	MSP-4056	281 (714)	70 (178)	99 (251)	2550 (1157)	1530 (694)
C350N6	MSP-4057	281 (714)	70 (178)	94 (239)	2550 (1157)	1530 (694)
C400N6	MSP-4059	305 (775)	90 (229)	126 (320)	3600 (1633)	2160 (980)
C450N6	MSP-4060	305 (775)	90 (229)	126 (320)	3600 (1633)	2160 (980)
C500N6B	MSP-4061	305 (775)	90 (229)	126 (320)	3600 (1633)	2160 (980)
C550N6	MSP-4062	340 (864)	102 (259)	132 (335)	4400 (1996)	2640 (1197)
C600N6	MSP-4063	365 (927)	102 (259)	128 (325)	5100 (2313)	3060 (1388)
C650N6	MSP-4065	365 (927)	102 (259)	128 (325)	5100 (2313)	3060 (1388)
C750N6	MSP-4067	365 (927)	102 (259)	128 (325)	5100 (2313)	3060 (1388)
C1000N6B	MSP-4070	403 (1024)	102 (259)	131 (333)	5750 (2608)	3450 (1565)
C1300N6	MSP-4071	403 (1024)	102 (259)	131 (333)	5750 (2608)	3450 (1565)

Applicable codes and standards

The Underwriters Laboratory (UL) 2200 Listing is a comprehensive safety standard encompassing the design, construction, and performance of stationary GenSets.

CSA Group tests products under a formal process to ensure that they meet the safety and/or performance requirements of applicable standards. This GenSet is certified to: CSA 22.2 No. 100 Motors and Generators; CSA 22.2 No. 0.4-044 Bonding of Electrical Equipment; CSA 22.2 No. 14 Industrial Control Equipment; and CSA 22.2 No. 0 General Requirements - Canadian Electrical Code, Part II. All low voltage models are CSA-certified to product class 4215-01.

ISO 9001:2015

This product has been manufactured under the controls established by an approved management system that conforms with ISO 9001:2015.

GenSets with weather-protective or sound-attenuated enclosures may reduce the ambient temperature of the GenSet by 4 to 8 °F (2 to 4.5 °C) depending on the type of enclosure and site conditions. Refer to the GenSet specification sheet and the cooling data sheet for specific capabilities.

Cummins Inc.
Box 3005
Columbus, IN 47202-3005
U.S.A.

1-800-CUMMINS™ (1-800-286-6467)
cummins.com

Printed in U.S.A.
©2023 Cummins Inc.

Section IV

REV	REL NO	REVISION	DWN	CKD	APVD	DATE
–	2019–230	RELEASED TO PRODUCTION	KL433	NA372	NA372	15MAY19
1	2019–605	EXHAUST OUTLET WAS 10.00"	LQ629	NA372	NA372	11DEC19
2	2022–011	REMOVED NEWAGE HCI534 C ADDED NEWAGE S6L1D–C41	KL433	NA372	NA372	05JAN22

ENGINE SERVICE CONNECTIONS

GAS INLET ---------- 2.50" NPT
ENGINE WATER IN ----------3.50" O.D.
ENGINE WATER OUT ---------2X 3.00" O.D.
DE–AERATION ----------2X 1/4" NPT
MAG PICK–UP ---------- 5/8–18 UNF
OIL DRAIN PLUG ----------1–18 NS
EXHAUST STACK AT TURBO ----2X 4.00" O.D.
AFTERCOOLER WATER IN ------2.00" NPT
AFTERCOOLER WATER OUT -----1.50" O.D.
EXH TEMP COUPLING --------2X 1/4" NPT
EXHAUST OUTLET ----------8.00" O.D.

FLUID CAPACITIES

ENGINE OIL ----------18 GAL
ENGINE COOLANT ----------85 QTS
AFTERCOOLER COOLANT --------9 QTS
RAD JACKET WATER ----------22.11 GAL
RAD AFTERCOOLER ----------13.71 GAL

SERVICE NOTES

16.80" REQUIRED TO REMOVE OIL PAN
12.50" REQUIRED TO REMOVE OIL DIPSTICK
3.00" REQUIRED TO REMOVE OIL FILTER

GENERATOR FRAME SIZE	DIM* "A"	DIM* "B"	TOTAL WEIGHT* (WET) LBS/KG
NEWAGE HCI534 D	72.27	35.16	20862/9463
NEWAGE HCI534 E	74.00	34.98	21131/9485
NEWAGE HCI534 F	75.20	34.80	21448/9729
NEWAGE S6L1D–C41	71.24	35.34	20916/9487

*SEE NOTES 7, 8 AND 9

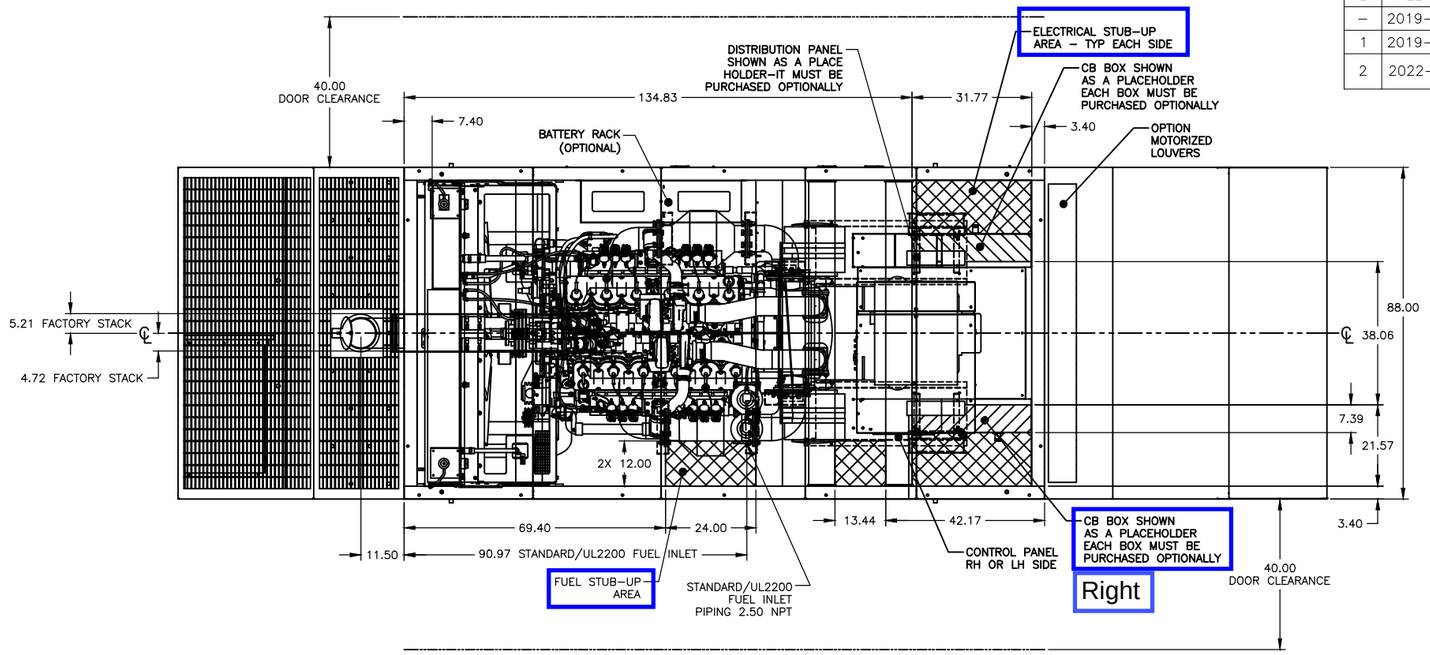

NOTE:

GAS SUPPLY PRESSURE AND VOLUME MUST MEET REQUIREMENTS TO ALLOW OPERATION OF THE GENERATOR AT 100% LOAD. PLEASE SEE GENERATOR DATA SHEETS.

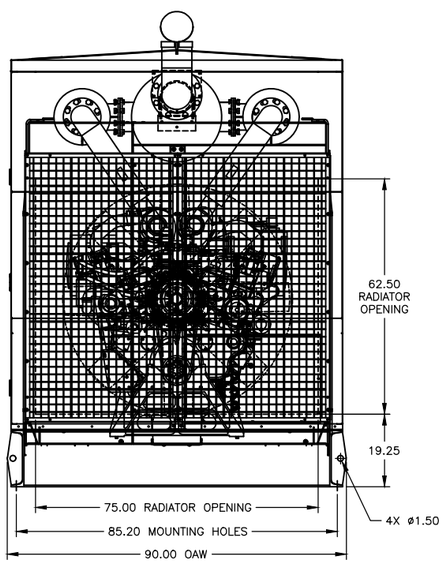

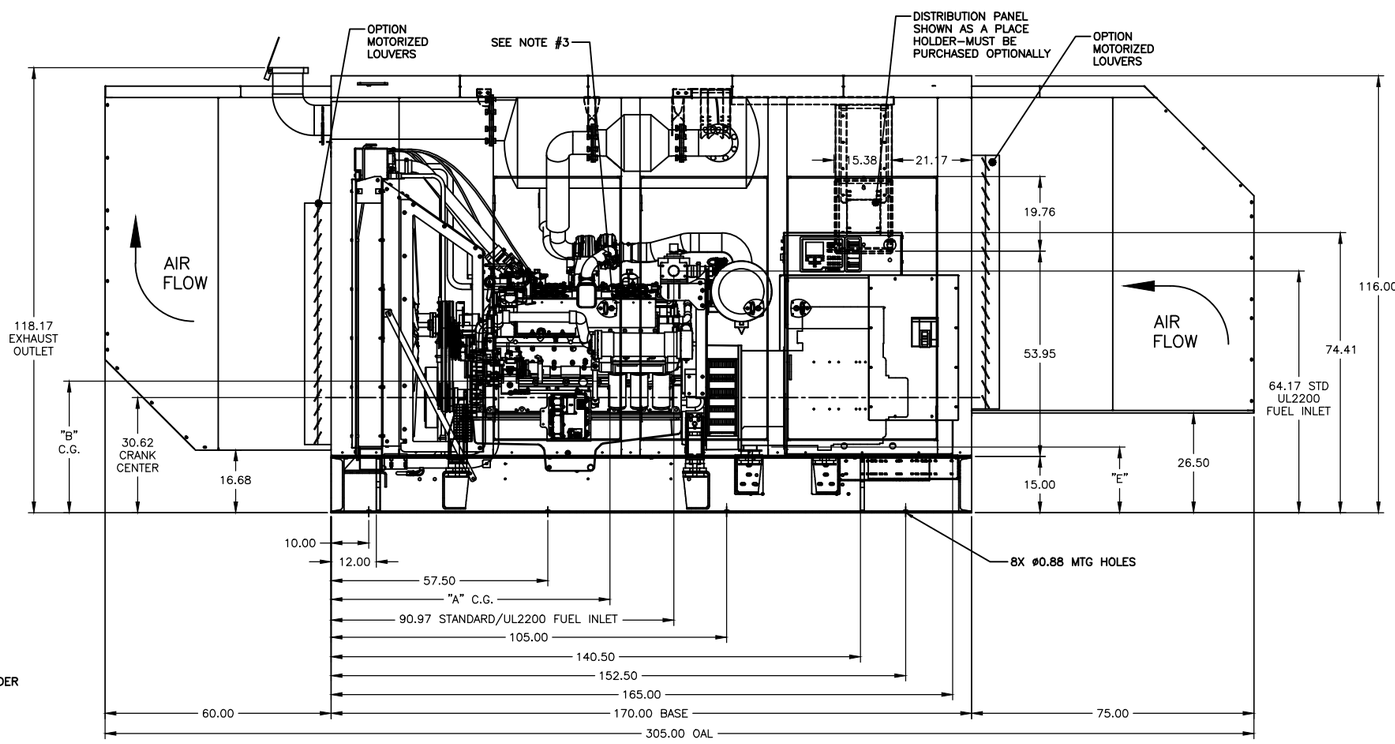

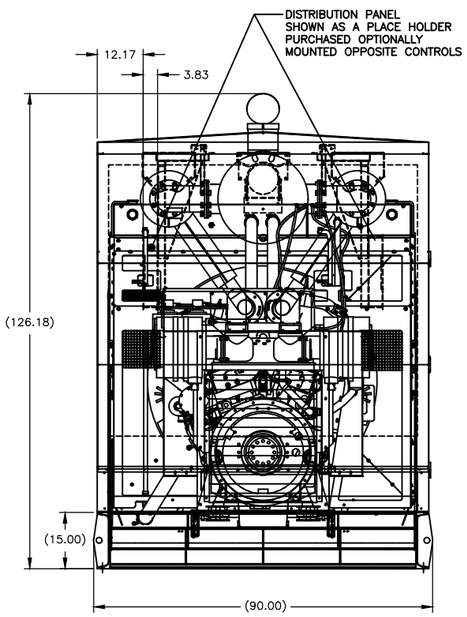

NOTES:
1) ENCLOSURE IS TO BE PAINTED ONAN GREEN UNLESS OTHERWISE NOTED ON ORDER
2) ALL HARDWARE TO BE STAINLESS STEEL
3) ALL DOORS KEYED ALIKE
4) STAINLESS STEEL LIFT–OFF DOOR HINGES
5) FOLDING T–HANDLE COMPOSITE DOOR LATCH
6) ENCLOSURE IS 14 GAUGE
7) ALL WEIGHTS AND DIMENSIONS ARE APPROXIMATE
8) WEIGHTS DO NOT INCLUDE BATTERIES OR OPTIONAL EQUIPMENT
9) WEIGHTS INCLUDE STANDARD CRITICAL GRADE EXHAUST – FOR HOSPITAL GRADE EXHAUST ADD 200 LBS/91 KG
10) CONTROLLER CAN BE MOUNTED ON EITHER SIDE OF CABINET
11) REQUIRES USE OF SPREADER BAR WHEN LIFTING TO PREVENT DAMAGE TO UNIT
12) GENSET DOES NOT INCLUDE FLOOR – CONTACT FACTORY FOR PRICING
13) GENSETS HAVE INTEGRAL ISOLATION

DIMENSIONS ARE IN: INCHES
[ ] ARE IN: .
DO NOT SCALE PRINT
DIMENSION TOLERANCES
X.X: ±0.090IN OR 2.3mm
X.XX: ±0.030IN OR 0.76mm
X.XXX: ±0.015IN OR 0.381mm
ANGULAR TOLERANCE: ±1°
SCALE 1.00
CMI DATA CLASSIFICATION
Cummins Confidential
DWN KL433
CKD NA372
APVD NA372
DATE 15MAY2019
THIS DOCUMENT (AND THE INFORMATION SHOWN THEREON) IS CONFIDENTIAL AND PROPRIETARY AND SHALL NOT BE DISCLOSED TO OTHERS IN HARD COPY OR ELECTRONIC FORM, REPRODUCED BY ANY MEANS, OR USED FOR ANY PURPOSE WITHOUT WRITTEN CONSENT OF CUMMINS INC.
FOR INTERPRETATION OF DIMENSIONING AND TOLERANCING, SEE ASME Y14.5–2009
MUST CONFORM TO CES 10903
DWG SIZE D
Cummins Inc.
ITEM NAME
GENSET, GTA28E
RADIATOR, L1/L2
ITEM NUMBER
C500N6B–03
ACAD SHEET 1 OF 1

BILL OF MATERIAL			
ITEM	QTY	DESCRIPTION	PART NUMBER
1	1	RAIN CAP, 8"; GT EXHAUST 22-800	22-800
2	6	KIT,GASKET,NUT,BOLT; FULL FACE FIBER,5	23580.500
3	1	KIT,GASKET,NUT,BOLT; FULL FACE FIBER,8	23580.800
4	4	PLUG,PIPE; -4 NPT,316 STAINLESS	26961-4
5	1	MUFFLER; GTA28E, CRITICAL GRADE	A059J547
6	2	TUBE, EXHAUST TRANSFER; GTA28E	A059J548
7	2	TUBE, EXHAUST TRANSFER; GTA28E	A059J549
8	1	TUBE, EXHAUST TRANSFER; GTA28E	A059J550
9	1	BLANKET, MUFFLER; KIT, GTA28E	A059J551
10	2	CLAMP, EXHAUST, 4"; RIKER TEC-400	TEC-400

REV	REL NO	REVISION	DWN	CKD	APVD	DATE
-	2019-103	RELEASED TO PRODUCTION	KL433		NA372	04MAR19
5	2020-247	UPDATED GEOMETRY TO A059J548 & A059J551	DJH	JCB	JCB	22DEC20

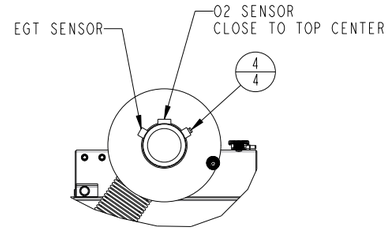

SECTION A-A
CATALYST
CUT SECTION
FOR CLARITY

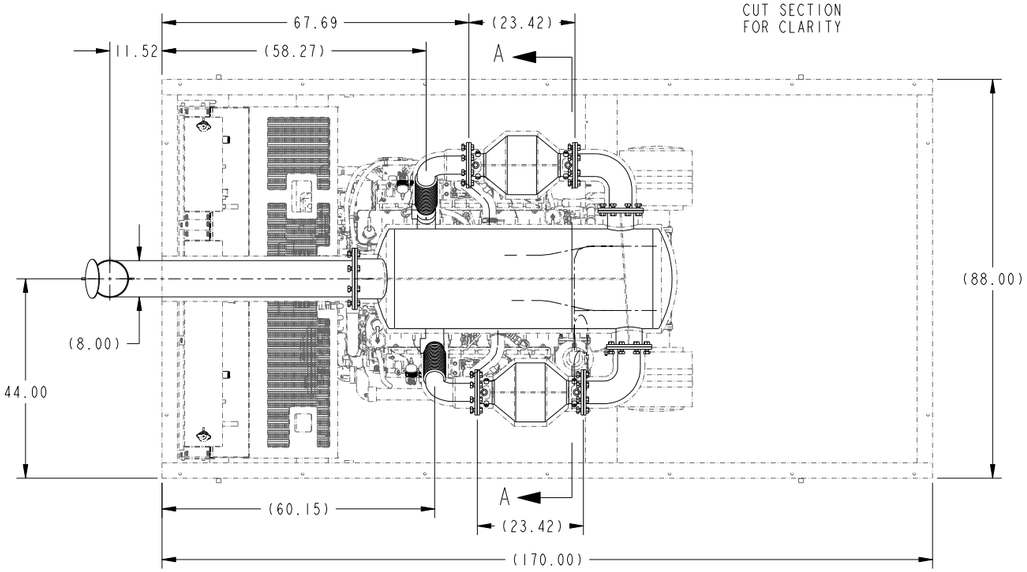

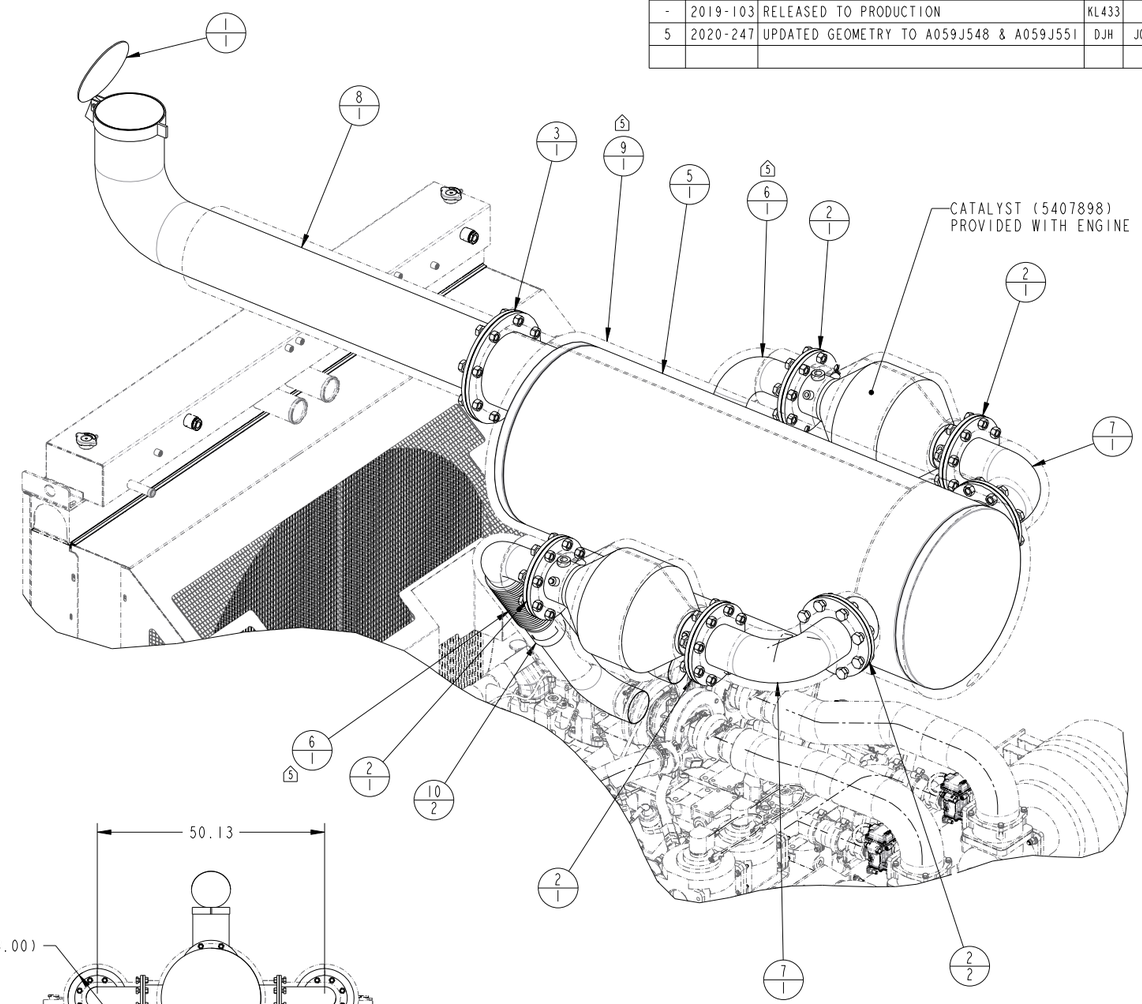

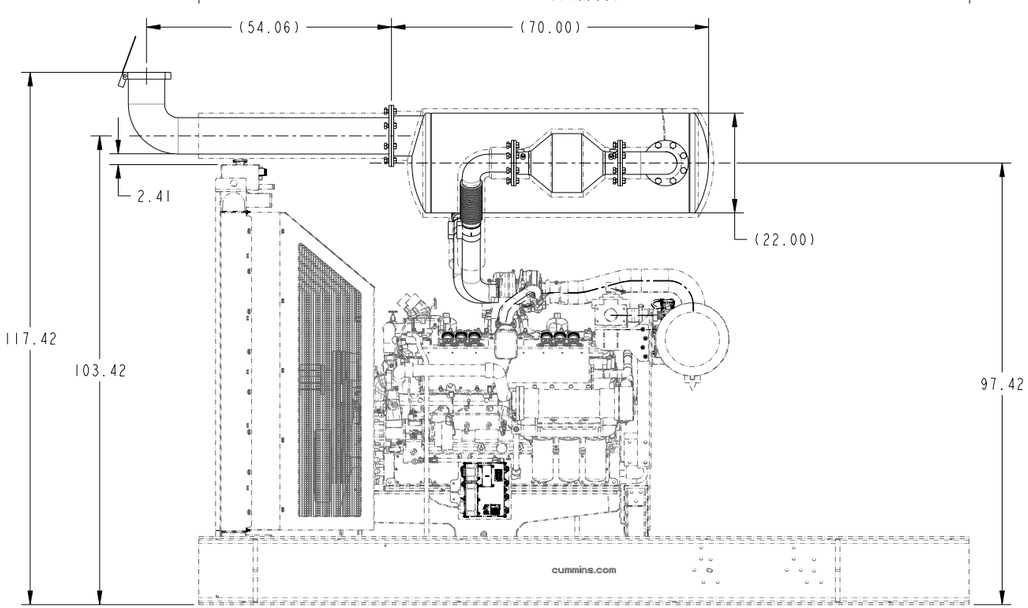

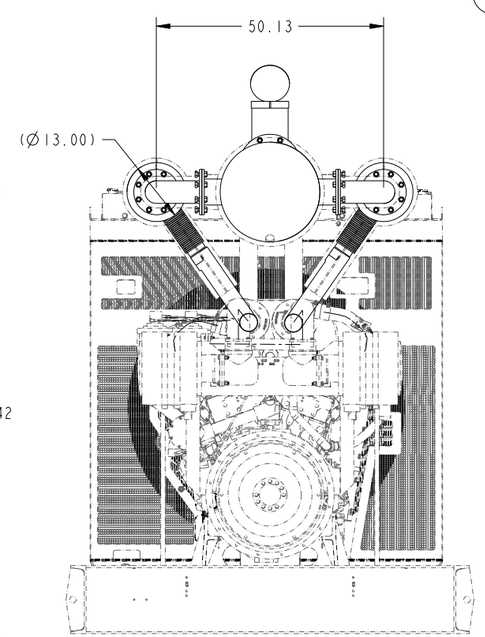

NOTES:
1. CATALYST: (5407898) TO BE INSTALLED SO THAT O2 SENSORS ARE ABOVE HORIZONTAL
2. O2 SENSOR P/N 4364454 COME WITH ENGINE
3. EGT SENSOR P/N 5415194 COME WITH ENGINE
4. CATALYST TO BE MOUNTED WITH O2 SENSOR PORT ON TOP AND AT OR NEAR VERTICAL

DIMENSIONS ARE IN: INCHES [ ] ARE IN: .	DO NOT SCALE PRINT	CMI DATA CLASSIFICATION Cummins Confidential	Cummins Inc.
DRAWING TOLERANCES APPLY TO PRIMARY DIMENSIONS UNLESS OTHERWISE SPECIFIED X: ± 1 IN OR 4 mm X.X: ± .1 IN OR 0.1 mm X.XX: ± .030 IN OR 0.25 mm X.XXX: ± .010 IN OR 0.025 mm ANGULAR TOLERANCE: ± 1°	SCALE .120	DWN KL433 CKD NA372 APVD NA372 DATE 04MAR2019	ITEM NAME ASM, EXHAUST SYSTEM GTA28E,CRIT GRADE,ENCLOSED
THIS DOCUMENT (AND THE INFORMATION SHOWN THEREON) IS CONFIDENTIAL AND PROPRIETARY AND SHALL NOT BE DISCLOSED TO OTHERS IN HARD COPY OR ELECTRONIC FORM, REPRODUCED BY ANY MEANS, OR USED FOR ANY PURPOSE WITHOUT WRITTEN CONSENT OF CUMMINS INC.		FOR INTERPRETATION OF DIMENSIONING AND TOLERANCING, SEE ASME Y14.5-2009	MUST CONFORM TO CES 10903 · CAD SIZE D · CAD SHEET 1 OF 1 · ITEM NUMBER A059J546 · REV 5

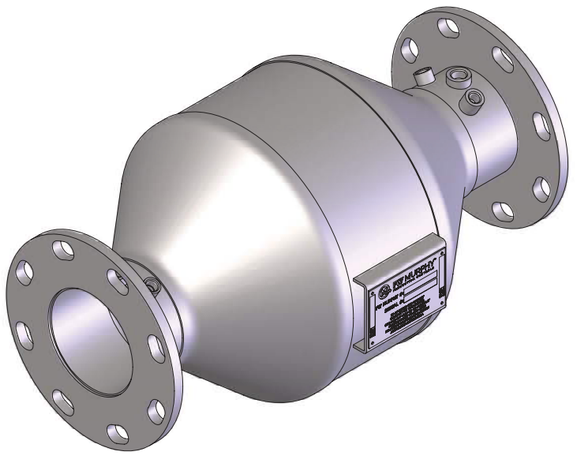

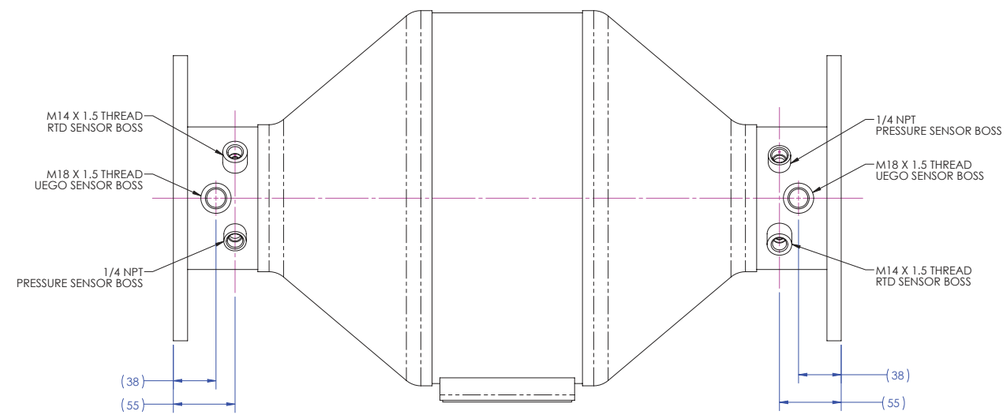

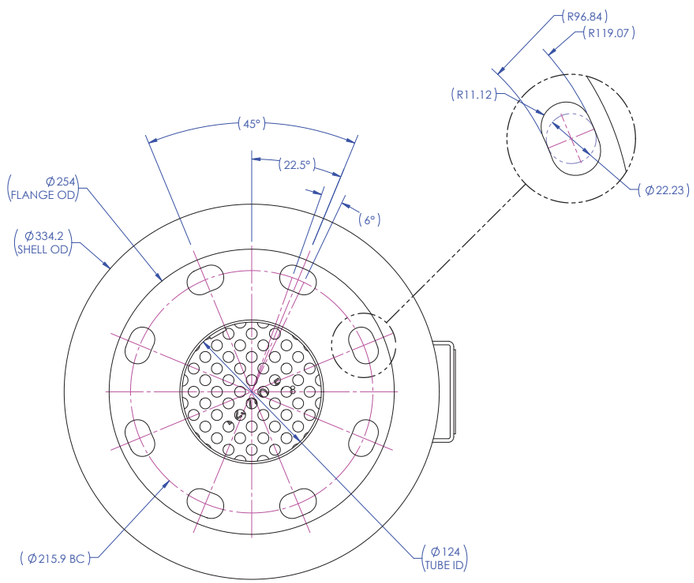

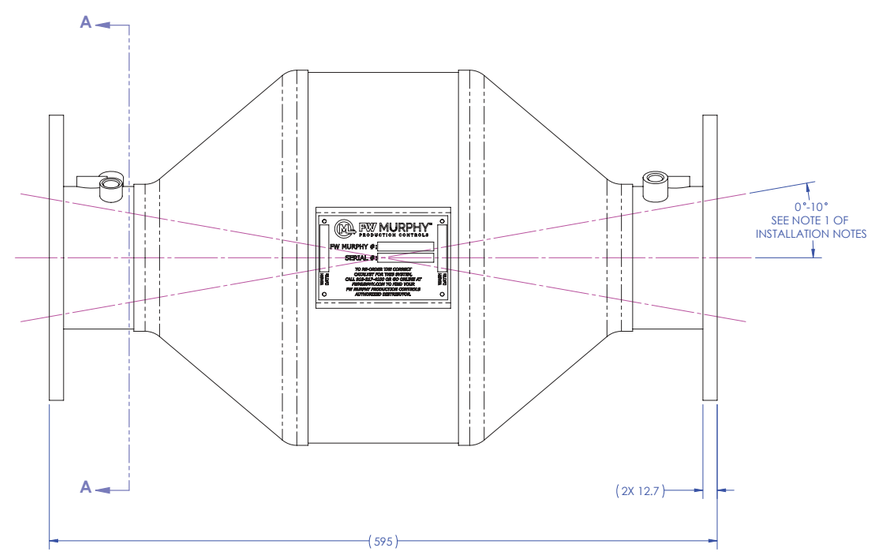

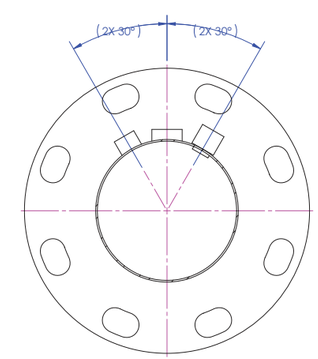

SECTION A-A

NOTES:

1. ALL DIMENSIONS SHOWN ARE FOR REFERENCE ONLY.
2. CATALYST DOES NOT HAVE A FLOW DIRECTION.
3. CATALYST MUST BE MOUNTED WITHIN 1.8 METERS (70 INCHES) OF EXHAUST MANIFOLD.
4. MOUNTING FLANGE SLOTS ARE DESIGNED FOR 3/4" DIAMETER BOLTS.
5. CATALYST MUST BE MOUNTED WITHIN 10° OF HORIZONTAL. ANY OTHER ORIENTATIONS MUST BE APPROVED BY FW MURPHY PRODUCTION CONTROLS ENGINEERING.
6. CATALYST MUST BE ORIENTED SUCH THAT THE O2 SENSORS ARE WITHIN (± 15°) OF VERTICAL WITH SENSORS ON TOP OF CATALYST.
7. CATALYST MUST BE SUPPORTED AT A MINIMUM OF TWO LOCATIONS.
8. CATALYST SHALL NOT SUPPORT MOUNTING LOADS FROM ADJACENT COMPONENTS.
9. VIBRATION ACCELERATION NOT TO EXCEED 10G.

THIS DOCUMENT IS APPROVED FOR **CUSTOMER** DISTRIBUTION.
DO NOT DISTRIBUTE TO THIRD PARTIES WITHOUT WRITTEN PERMISSION FROM ENOVATION CONTROLS.

UNLESS OTHERWISE SPECIFIED, PRODUCE PART FROM THE FW MURPHY PRODUCTION CONTROLS CAD MODEL. REFER TO THE DRAWING FOR ASSOCIATED TOLERANCES, DATUMS AND FEATURE CONTROLS.	DO NOT SCALE DRAWING. DIMENSIONING AND TOLERANCING PER ASME Y14.5 - 2009 APPLY.	METRIC	
DRAWN: E. COBB	DATE DRAWN: 2017.05.01	DESCRIPTION: CATALYST,SEALED,DIF,13,6,5,PD	
CHECKED: C. SIEBERT	DATE CHECKED: 2017.05.01		
REFERENCE REVISION SPECIFIC ECO FOR APPROVAL SIGNATURES	PART NUMBER: E2379055	PROJECT NUMBER: E2379055_00	REVISION: C1
	FILE NAME: E2379055.SLDPRT	SCALE: 1:2.5 AND NOTED	SIZE: A1 / SHEET: 1 OF 1

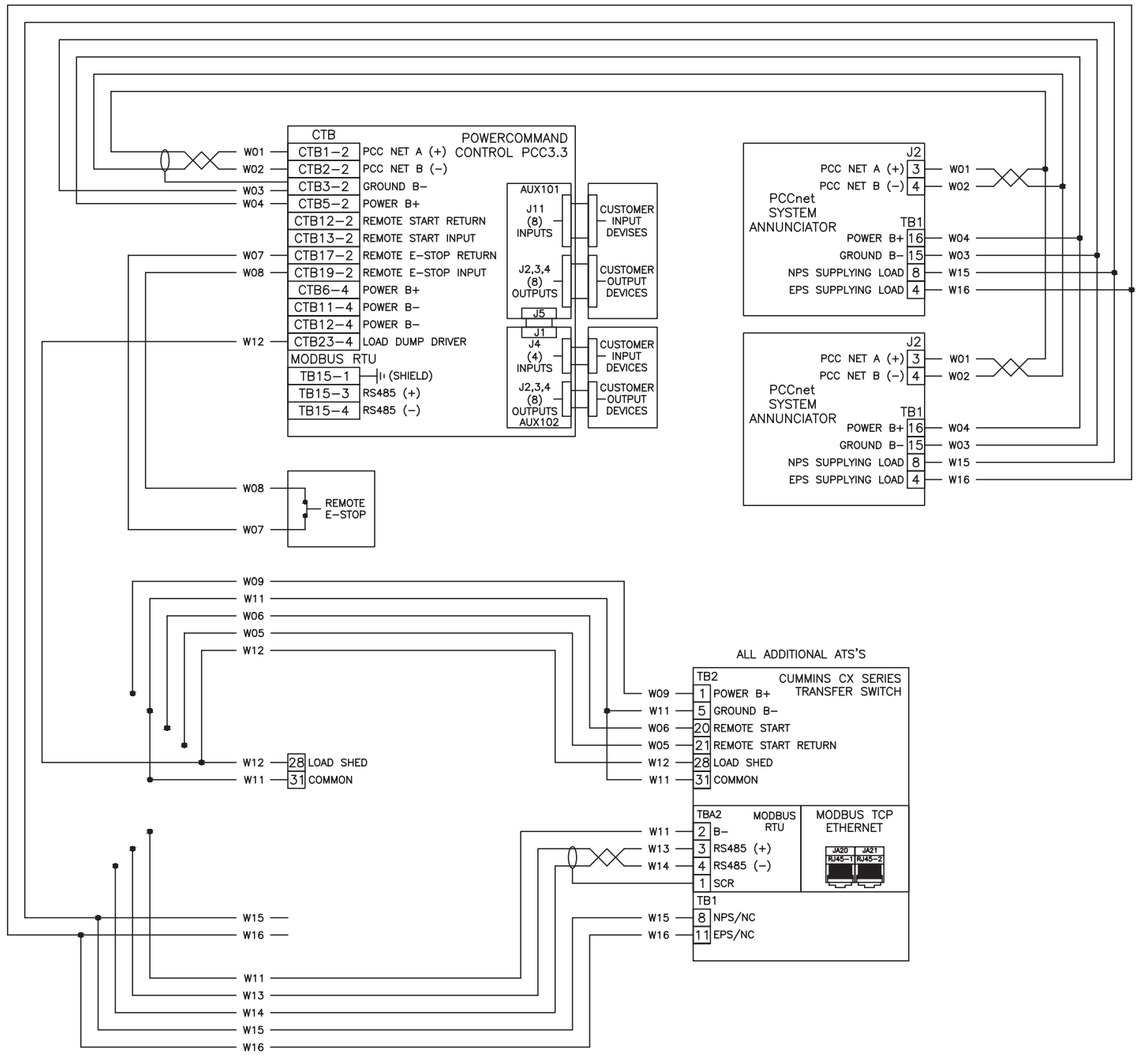

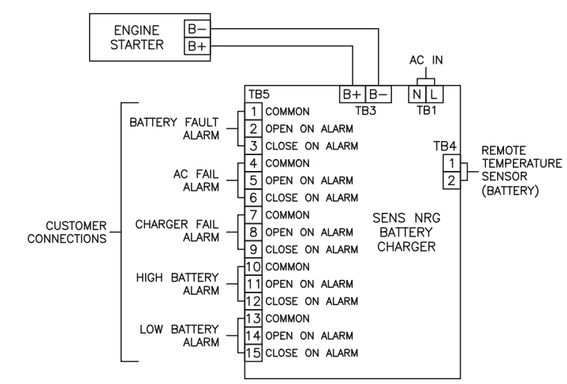

- ALL INTERCONNECT WIRING AND DATA CABLING IS TO BE DONE WITH STRANDED WIRE PER NFPA 110.
- PCC NET CABLE: BELDEN 9729. (24 AWG, STRANDED, SHIELDED, TWISTED PAIR)
- CX PC80 MODBUS RS485 CABLE: BELDEN 3106A. (22 AWG, STRANDED, SHIELDED, TWISTED PAIR)
- TOTAL NETWORK LENGTH NOT TO EXCEED 4000 FT.

UNLESS OTHERWISE SPECIFIED, ALL DIMENSIONS ARE IN INCHES

TOLERANCES:
FRACTIONAL: ±
.X: .06
.XX: .03
.XXX: .01
ANGLES: .5°

REFERENCES			
A065N783	A053C830	A054H094/A062F799	A063C050/A063J16
A052P338			
A054A427			

	PREP. BY:	CHKD BY:	MODIFIED BY:	FINISH: N/A
	KDU	–	–	
	11/03/23	–	–	

ENGINE FAMILY: PCC3300

CX SERIES ATS

CSSNA POWER GEN

SITE NAME: – –	CONTACT NAME: –	CUSTOMER PROJECT NO: –	TITLE: PCC3.3 CONTROL / CX SERIES ATS QSL9..QSX15..QSK23..QST30
CONTRACTOR NAME: –	CONTACT NO: –	CSSNA PROJECT NO: –	SIZE: B DWG NO: PCC3.3 INTERCONNECT REV 2
			SCALE: NONE DO NOT SCALE PRINT SHEET 1 OF 1

Section V

Cummins Sales and Service

Customer / Contractor Pre Commissioning Inspection Form

The intent of this form is for the contractor to prepare for equipment to be commissioned by a certified Cummins Field Service Power Generation Technician. Filling out this form is required and will minimize delays due to equipment failing to meet requirements. Completing this checklist in its entirety should minimize the need for additional billing beyond the previously provided commissioning quote.

The items listed are the responsibility of the contractor and not Cummins Sales and Service.

Project Name/End User: _____

Contractor: _____

Address: _____ **Contact:** _____

Business Phone: _____ **Cell Phone:**_____

Email: _____

ON SITE INFORMATION

On-Site Contact Information: _____

Address: _____

Time Requested Onsite: _____

Sub location of Generator (ie. Roof, basement, floor): _____

Does the facility have the following: Loading Dock ☐ Elevator ☐

Access (from truck and load bank parking to generator in feet): _____

Parking: Is parking available on-site for service truck: Yes ☐ No ☐

Permits: Have all necessary air quality and local permits been secured: Yes ☐ No ☐ N/A ☐

Fuel Tank Testing: Is fuel tank testing required: Yes ☐ No ☐

If yes when is the inspector scheduled for: _____

Sales and Service

ON SITE INFORMATION CONTINUED

YES	NA	NO	
☐	☐	☐	Is the facility occupied and is customer aware there will be power outages after generator is started?
☐	☐	☐	Will there be any site safety training needed for technician prior to beginning? On site contact for training: _____
☐	☐	☐	Will customer representative be on site for operator training? On site contact for operator training: _____

MECHANICAL LOCATION AND PLACEMENT OF THE GENERATOR SET

YES	NA	NO	
☐	☐	☐	Generator is properly secured to pad or vibration isolators
☐	☐	☐	Generator Enclosure and/or Room is free of all debris
☐	☐	☐	No airflow obstructions to the engine or generator are present for cooling combustion (See Cummins T-030 or Installation manual of generator set)
☐	☐	☐	Room is designed for adequate inlet and outlet airflow

GASEOUS FUEL Natural Gas/LP Vapor/LP Liquid

YES	NA	NO	
☐	☐	☐	Natural gas and/or LPG fuel supply is connected.
☐	☐	☐	Fuel piping is the appropriate size based on full-load CFH/BTU requirement. Pipe size after service regulator: _____
☐	☐	☐	Service regulator(s), (if supplied), fuel strainer(s), flexible fuel line(s) and manual shut off are installed
☐	☐	☐	Fuel pressure after service regulator is:_____inches of H2O

I have read and fully understand the fuel requirements for this equipment, I am verifying that the piping and fuel supply meets or exceeds those requirements. I also understand failure to meet the requirements will result in additional charges.

_____ _____

Contractor "requestor" Signature ***Date***

Sales and Service

DIESEL FUELED GENERATORS

YES	NA	NO	
☐	☐	☐	Flexible fuel connections, (supply and return) are connected to generator and piping.
☐	☐	☐	Day tank installed, wired and plumbed (lines free of obstruction) to genset and main fuel tank if applicable. Only black iron pipe for fuel lines, never use copper or galvanized pipe.
☐	☐	☐	All tanks filled with enough fuel to perform startup and testing.
☐	☐	☐	A return line from engine to day tank and day tank to main tank should be in place

EXHAUST SYSTEM

YES	NA	NO	
☐	☐	☐	Exhaust wrapped or isolated to prevent accidental activation of fire protection devices and sprinklers.
☐	☐	☐	Exhaust flex-pipe is installed at engine exhaust outlet (The silencer and flex-pipe are supplied with the generator set).
☐	☐	☐	Silencer is installed with appropriate supports (no weight should be placed on the exhaust outlet of the genset).
☐	☐	☐	Exhaust system has proper expansion joints and wall thimbles (Thimbles are required for wall or roof penetration).

GENERATOR ELECTRICAL CONNECTIONS

YES	NA	NO	
☐	☐	☐	Load conductors connected to breakers
☐	☐	☐	Flexible connections used on all conduit connections to the generator set output box
☐	☐	☐	Remote start interconnection **stranded** wiring is installed between the generator set and the automatic transfer switch(s) and annunciator.
☐	☐	☐	AC Power conductors in dedicated conduit separate from any DC control or network wiring
☐	☐	☐	Ground fault connected/functioning on generator, if supplied
☐	☐	☐	AC power wired to the coolant heaters (Do NOT energize)
☐	☐	☐	Check for AC oil pan heater, control heater or generator winding heater (Needing AC wiring)
☐	☐	☐	Generator is grounded in compliance with local codes
☐	☐	☐	If applicable, louver motors are operational and connected to generator controls

Sales and Service

GENERATOR ELECTRICAL CONNECTIONS CONTINUED

YES	NA	NO	
☐	☐	☐	Annunciator mounted in a location where someone can observe a fault of the remote generator system Where is annunciator located? _____
☐	☐	☐	Are there additional ancillary devices/equipment that need to be integrated into the system? If yes, please define_____
☐	☐	☐	Battery charger mounted (free of vibration, weather, accessible for an operator to observe easily) and connected to the appropriate AC and DC wiring to operate the charger.

TRANSFER SWITCH ELECTRICAL CONNECTIONS

YES	NA	NO	
☐	☐	☐	Conductors connected for Utility, Load and Emergency
☐	☐	☐	Remote start interconnection **stranded** wiring is installed between the generator set and the automatic transfer switch(s).
☐	☐	☐	Four Pole Transfer Switch: Is generator neutral grounded? ☐

DAY OF STARTUP

YES	NA	NO	
☐	☐	☐	Training of facility personnel will be done on the same day as start up. Additional trips for operational training will be an additional charge.
☐	☐	☐	Can transfer switch be tested at time of generator startup? (There will be a power interruption) ***Note: After hours testing could result in additional charges.***
☐	☐	☐	If the associated switchgear and/or ATS(s) are not provided by Cummins, will the manufacturer's representative be on site?

Exercise with or without load? ☐

If known, Transfer Time delay set recommendations Generator Set to exercise Day:_____ Time:_____

_____ _____

Contractor "requestor" Signature ***Printed Name***

Date: _____

Please complete this form and return to schedule start up, if not returned within 5 business days prior to scheduled startup it may be delayed. I understand that the start-up date may have to be rescheduled at my expense if the above items have not been completed properly.

Commercial generator set

base limited warranty statement

Models manufactured by the
Cummins Custom Design and Upfit Center
(CDUC) in De Pere, Wisconsin

A042E778 Rev. 8
August 2021

PLEASE KEEP FOR YOUR RECORDS

Generator Set model:_____

Generator Set serial number or product identifier:_____

Generator Set data in-service: _____

NOTES:

This base limited warranty statement applies to the following commercial generator set (GenSet) models:

Table 1-1. Natural gas GenSets							
C55N6C	C55N6CB	C70N6C	C95N5C				
C115N6C	C150N5C	C175N6	C185N6C				
C200N6	C225N6	C225N6B	C230N6	C250N6	C250N6C	C250N6CB	C275N6C
C300N6	C350N6						
C400N5C	C400N6	C450N6	C485N6				
C500N6	C500N6B	C550N6	C550N5C	C580N6			
C600N6	C635N6	C650N6	C690N6				
C750N6	C760N6						
C815N6							
C1000N6B	C1300N6						

Table 1-2. Diesel GenSets	
C80D6B	
C110D6B	C130D6B
C275D6D	
C400D6B	

Cummins commercial generator set (GenSet) base limited warranty

This base limited warranty applies to all Cummins Inc. branded commercial GenSets identified herein and associated accessories ("Product"). This base limited warranty covers any failures of the Product, under normal use and service, which result from a defect in material or factory workmanship.

Product rating definitions:

Emergency Standby Power (ESP) is defined as the maximum power available during a variable electrical power sequence, under the stated operating conditions, for which a GenSet is capable of delivering in the event of a reliable utility power outage or under test conditions for up to 500 hours of operation per year. The permissible average power output over 24 hours of operation shall not exceed 70% of the ESP rating. For applications supporting an unreliable utility service, the Prime Power (PRP) rating should be used.

Prime Power (PRP) is defined as the maximum power which a GenSet is capable of delivering continuously while supplying a variable electrical load when operated for an unlimited number of hours per year. The permissible average power output over 24 hours of operation shall not exceed 70% of the PRP. For applications requiring permissible average output higher than stated, a Continuous Power (COP) rating should be used. Total operating time at 100% PRP rating shall not exceed 500 hours/year.

Continuous Power (COP) is defined as the maximum power which the GenSet is capable of delivering continuously while supplying a constant electrical load (supplying utility power at a constant 100 percent load) when operated for an unlimited number of hours per year. No overload capability is available for this rating.

Demand Response Power (DRP) - is defined as the maximum power which a spark-ignited GenSet is capable of delivering electrical power *in parallel* with commercially-available power in variable and non-variable load applications. DRP is intended for use in situations where there are contracted power outages, such as utility power curtailment. A DRP GenSet may be operated in parallel to the public utility **up to 500 hours per year**, with an average load factor no greater than 80% of the DRP rating. DRP GenSets with ESP ratings can be run in emergency standby applications up to their ESP rating for up to 50 hours per year. The customer should be aware, however, that the life of any DRP GenSet will be reduced by constant high load operation (running at ESP).

Environmental Protection Agency - Stationary Emergency (EPA-SE) is defined as being the maximum power available during a variable electrical power sequence, under the stated operating conditions, for which a generator set is capable of delivering in the event of a utility power outage or under test conditions and used in strict accordance with the EPA NSPS for stationary engines, 40 CFR part 60, subparts IIII and JJJJ, where a reliable utility must be present. The permissible average power output over 24 hours of operation shall not exceed 70% of the EPA-SE.

Base limited warranty period

The base limited warranty start date is the date of initial startup, first rental, demonstration or 18 months after factory ship date, whichever is sooner. The warranty period is as follows:

Base limited warranty period
(whichever occurs first)

Rating	Months	Maximum hours
Continuous Power (COP)	12	Unlimited
Demand Response Power (DRP)	12	500
Emergency Standby Power (ESP)	24	1000
Environmental Protection Agency - Stationary emergency (EPA-SE)	24	Unlimited
Prime Power (PRP)	12	Unlimited

Cummins responsibilities

In the event of a failure of the Product during the base limited warranty period due to defects in material or workmanship, Cummins will be responsible for only the following:

- All parts and labor required to repair the Product.
- Reasonable travel expenses to and from the Product site location.
- Maintenance items that are contaminated or damaged by a warrantable failure.

Owner responsibilities

The owner will be responsible for the following:

- Notifying the Cummins distributor or dealer within 30 days of the discovery of failure.
- Installing, operating, commissioning and maintaining the Product in accordance with Cummins' published policies and guidelines.
- Providing evidence for the date of commissioning.
- Providing sufficient access to and reasonable ability to remove the Product from the installation in the event of a warrantable failure.
- Incremental costs and expenses associated with Product removal and re-installation resulting from difficult or non-standard installations.
- Costs associated with rental of a GenSet used to replace the Product being repaired.

- Costs associated with labor overtime and premium shipping requested by the owner.
- All downtime expenses, fines, applicable taxes, damages, and other losses resulting from a warrantable failure.

Base limited warranty limitations

This base limited warranty does **not cover** Product failures resulting from:

- Inappropriate use relative to designated power rating or application guidelines.
- Inappropriate use of an EPA-SE application GenSet relative to EPA's standards
- Normal wear and tear or corrosion.
- Negligence, accidents or misuse.
- Improper and/or unauthorized installation.
- Lack of maintenance or unauthorized repair.
- Noncompliance with any Cummins manual, published guideline, or policy.
- Use of improper or contaminated fuels, coolants or lubricants.
- Improper storage before or after commissioning.
- Owner's delay in making Product available after notification of potential Product problem.
- Replacement parts and accessories not authorized by Cummins.
- Use of Battle Short Mode.
- Owner or operator abuse or neglect such as: operation without adequate coolant or lubricants; over-fueling; over-speeding; lack of maintenance to lubricating, cooling or air intake systems; delayed/late servicing and maintenance; improper storage, starting, warm-up, run-in or shutdown practices; or progressive damage resulting from a defective shutdown or warning device.
- Damage to parts, fixtures, housings, attachments and accessory items that are not part of the GenSet.
- Unusual or special operating environments.

This base limited warranty does **not cover**:

- Costs of maintenance, adjustments, installation, commissioning or start-up.
- Starting batteries, battery chargers, cooling packages, heating elements, exhaust system or after-treatment components, or trailers. (These components shall be covered by the respective manufacturer's warranty, if applicable.)
- Components added to the Product after shipment from Cummins.
- Costs associated with gaining access to the Product.

- Damage to customer property.
- Repair of cosmetic damage to an enclosure after shipment from Cummins.

Cummins right to failed components

Failed components claimed under this base limited warranty remain the property of Cummins. Cummins has the right to reclaim any failed component that has been replaced under this base limited warranty.

Limitation on warranties

THE WARRANTIES SET FORTH HEREIN ARE THE SOLE WARRANTIES MADE BY CUMMINS IN REGARD TO THE PRODUCT. CUMMINS MAKES NO OTHER WARRANTIES, EXPRESS OR IMPLIED, OR OF MERCHANTABILITY OR FITNESS FOR A PARTICULAR PURPOSE.

Limitation on liabilities

IN NO EVENT SHALL CUMMINS BE LIABLE FOR INCIDENTAL OR CONSEQUENTIAL DAMAGES.

This base limited warranty shall be enforced to the maximum extent permitted by applicable law. This base limited warranty gives the owner specific rights that may vary from state to state or from jurisdiction to jurisdiction.

This product has been manufactured under the controls established by a Bureau Veritas Certification approved management system that conforms with ISO 9001:2015.

Cummins contact information

Any questions regarding this base imited warranty statement may be directed to CSSNAPGWarranty@cummins.com.

Cummins Inc.
Box 3005
Columbus, IN 47202-3005
U.S.A.

1-800-CUMMINS™ (1-800-286-6467)
cummins.com

Printed in U.S.A.
©2021 Cummins Inc.